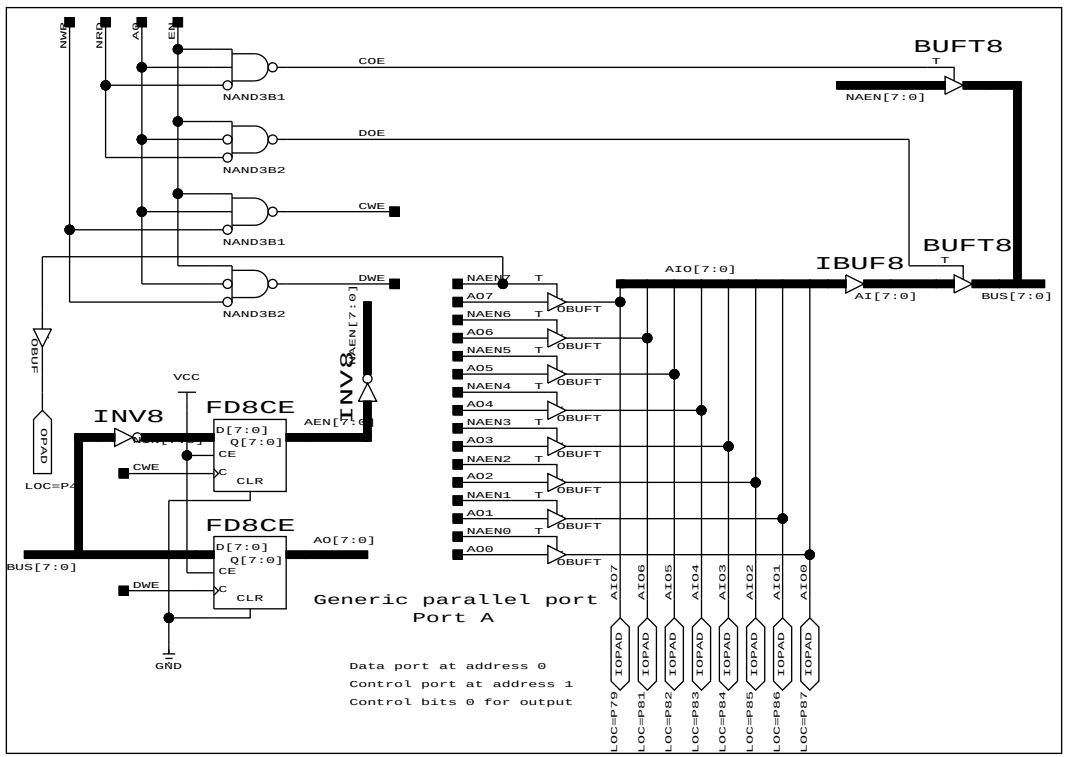
NWR
NRD
A0
EN
NAND3B1
NAND3B2
NAND3B1
NAND3B2
COE
DOE
CWE
DWE
BUFT8
T
NAEN[7:0]
BUFT8
T
IBUF8
AIO[7:0]
AI[7:0]
BUS[7:0]
NAEN7
AO7
NAEN6
AO6
NAEN5
AO5
NAEN4
AO4
NAEN3
AO3
NAEN2
AO2
NAEN1
AO1
NAEN0
AO0
OBUFT
OBUF
OPAD
LOC=P4
VCC
INV8
FD8CE
D[7:0]
Q[7:0]
CE
C
CLR
CWE
INV8
AEN[7:0]
FD8CE
AO[7:0]
DWE
BUS[7:0]
GND
Generic parallel port
Port A
Data port at address 0
Control port at address 1
Control bits 0 for output
AIO7
AIO6
AIO5
AIO4
AIO3
AIO2
AIO1
AIO0
IOPAD
LOC=P79
LOC=P81
LOC=P82
LOC=P83
LOC=P84
LOC=P85
LOC=P86
LOC=P87