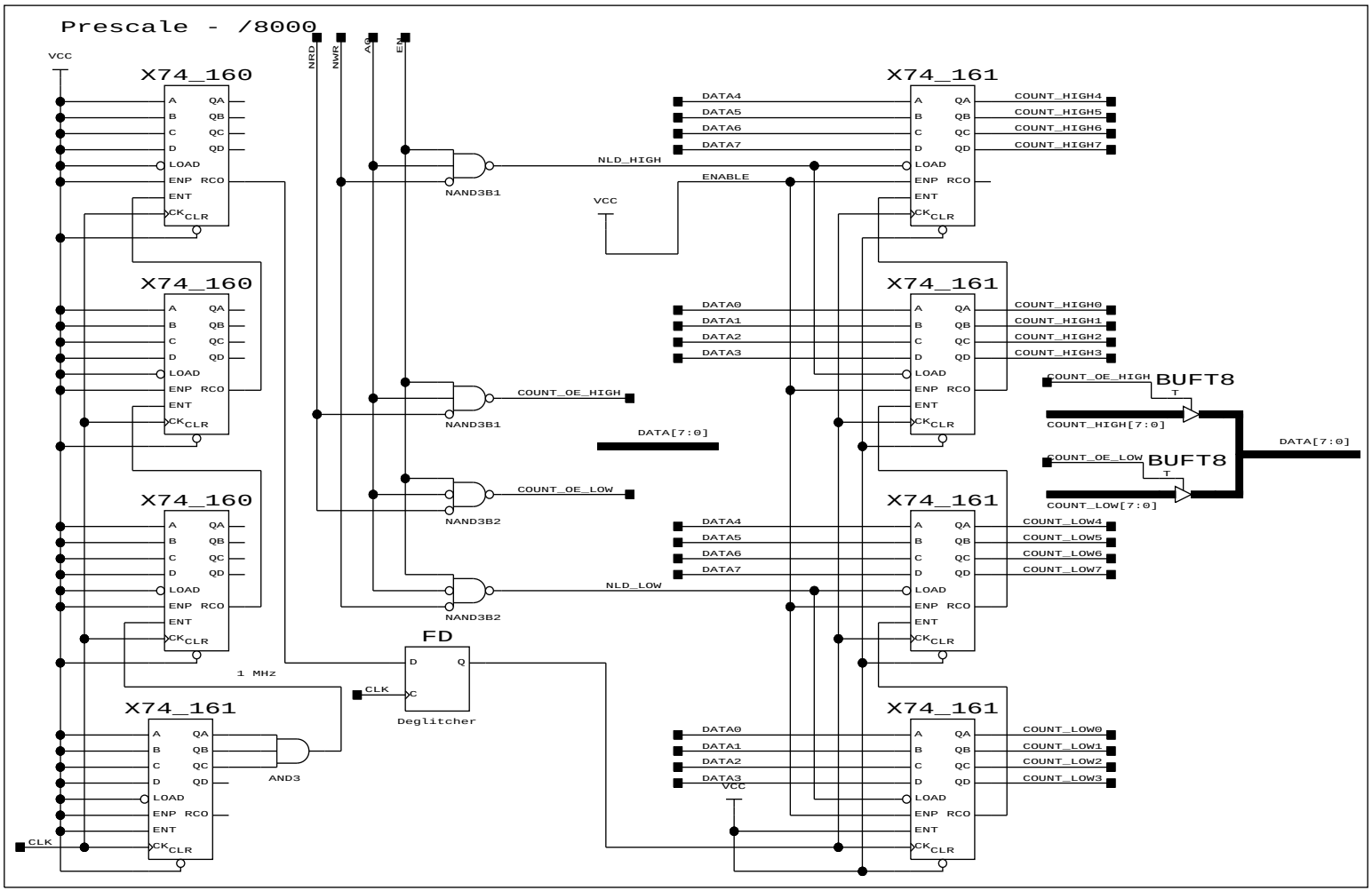
Prescale - /8000
VCC
NRD
NWR
AS
EN
X74_160
A
B
C
D
LOAD
ENP
RCO
ENT
CK
CLR
QA
QB
QC
QD
NAND3B1
NAND3B2
NLD_HIGH
NLD_LOW
ENABLE
COUNT_OE_HIGH
COUNT_OE_LOW
DATA[7:0]
X74_161
DATA4
DATA5
DATA6
DATA7
DATA0
DATA1
DATA2
DATA3
COUNT_HIGH4
COUNT_HIGH5
COUNT_HIGH6
COUNT_HIGH7
COUNT_HIGH0
COUNT_HIGH1
COUNT_HIGH2
COUNT_HIGH3
COUNT_LOW4
COUNT_LOW5
COUNT_LOW6
COUNT_LOW7
COUNT_LOW0
COUNT_LOW1
COUNT_LOW2
COUNT_LOW3
BUFT8
T
COUNT_HIGH[7:0]
COUNT_LOW[7:0]
FD
D
Q
C
CLK
Deglitcher
1 MHz
AND3