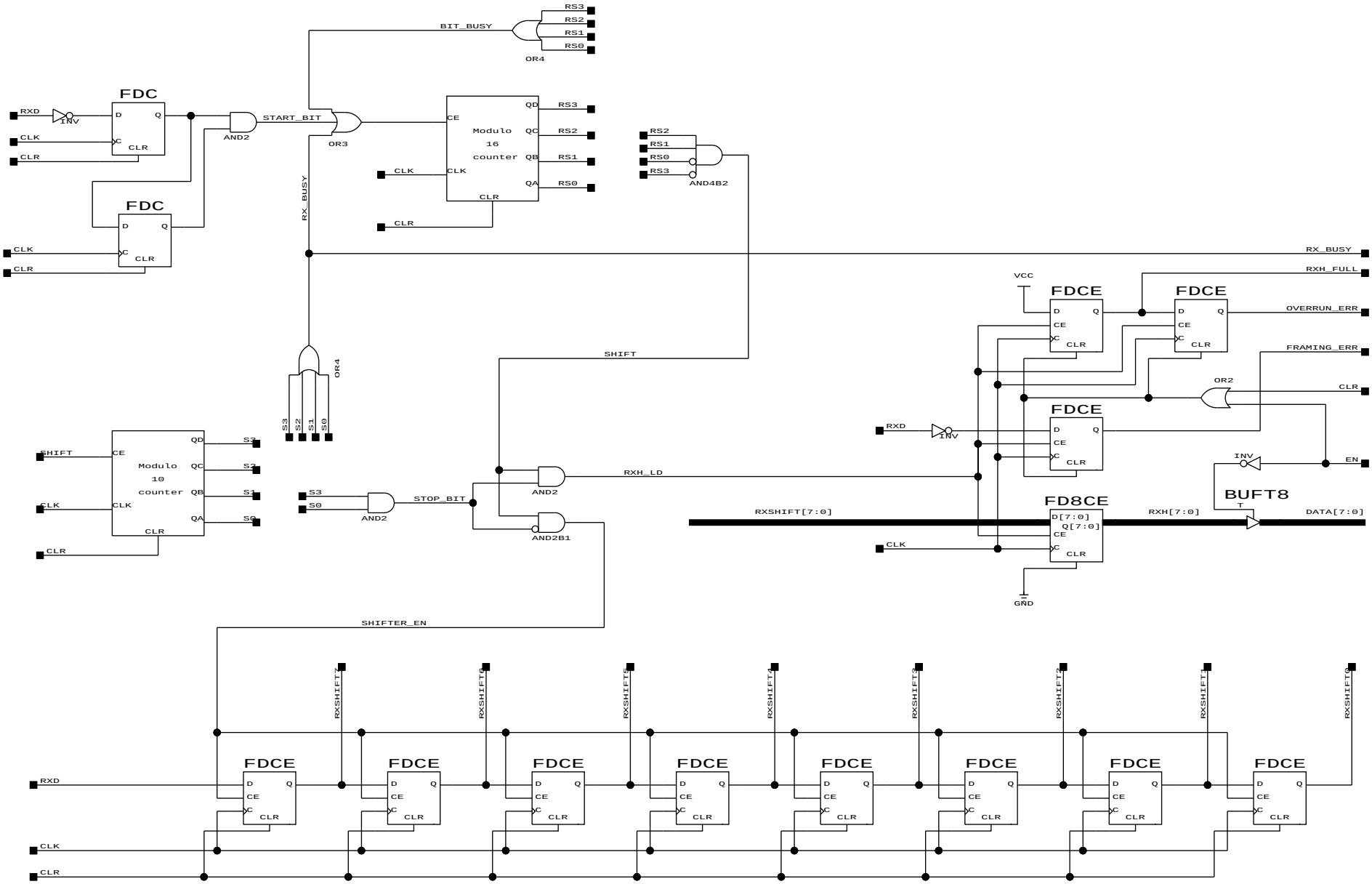UART receiver