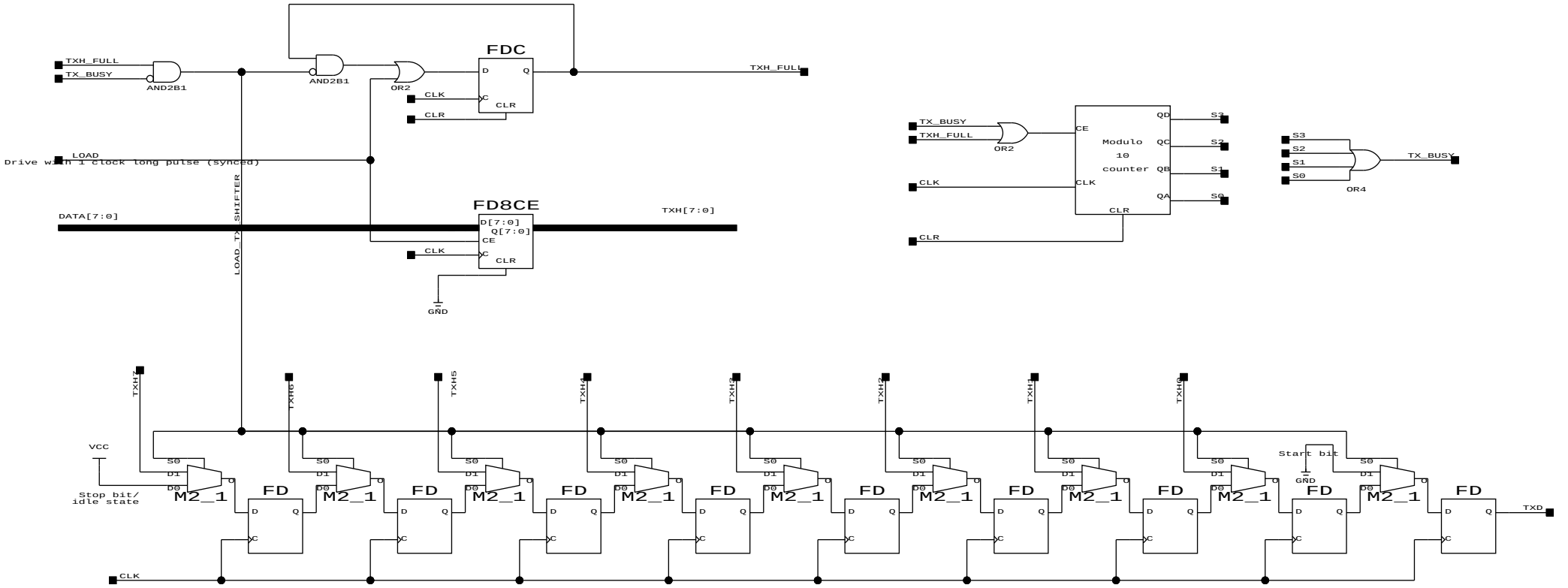UART transmitter