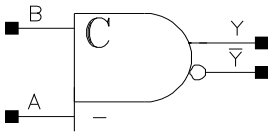
B
C
Y
Y
A

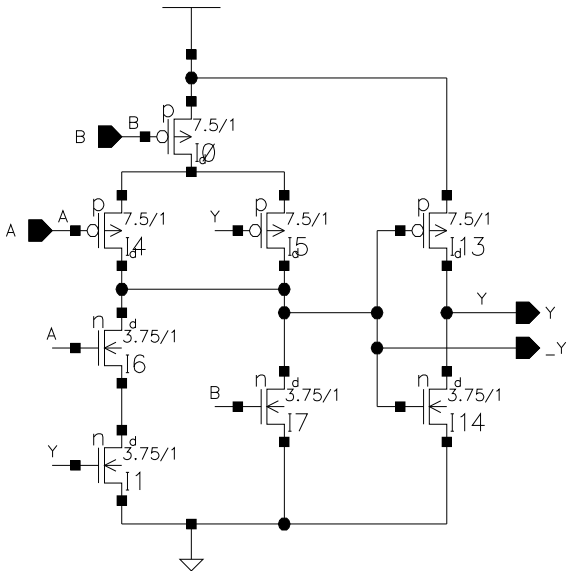
B
B
p
7.5/1
I0
A
A
p
7.5/1
I4
Y
p
7.5/1
I5
p
7.5/1
I13
Y
Y
_Y
A
n
d
3.75/1
I6
B
n
d
3.75/1
I7
n
d
3.75/1
I14
Y
n
d
3.75/1
I1

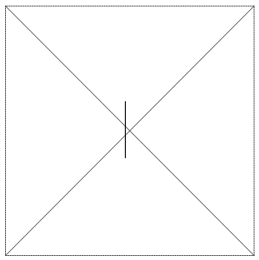

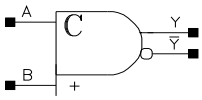
A
C
Y
Y
B
+

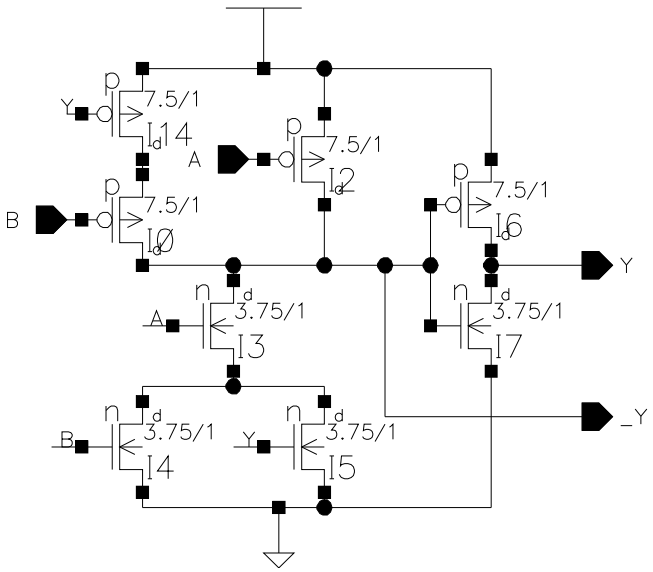
p
7.5/1
Y
I14
p
7.5/1
A
I2
p
7.5/1
B
I0
p
7.5/1
I6
Y
n
d
3.75/1
A
I3
n
d
3.75/1
I7
_Y
n
d
3.75/1
B
I4
n
d
3.75/1
Y
I5

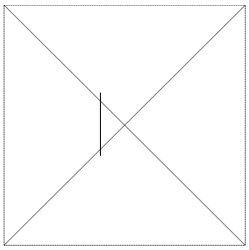

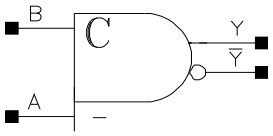
B
C
Y
Y
A
_

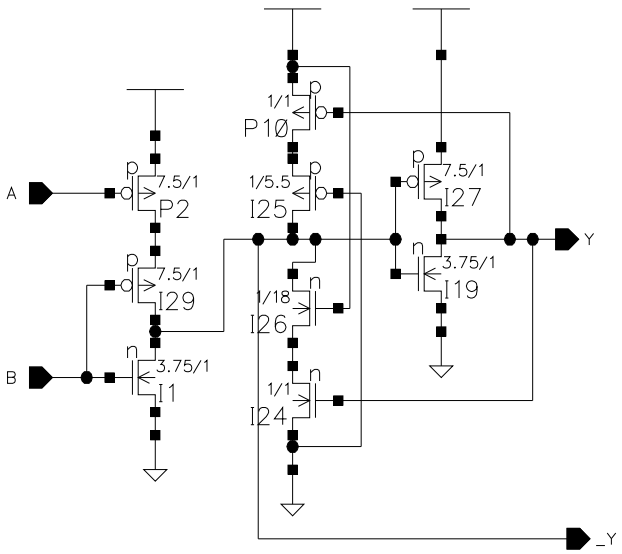
A
B
p
7.5/1
P2
p
7.5/1
I29
n
3.75/1
I1
p
1/1
P10
p
1/5.5
I25
n
1/18
I26
n
1/1
I24
p
7.5/1
I27
n
3.75/1
I19
Y
_Y

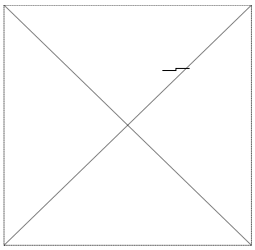
_

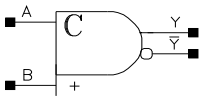
A
C
Y
Y
B
+

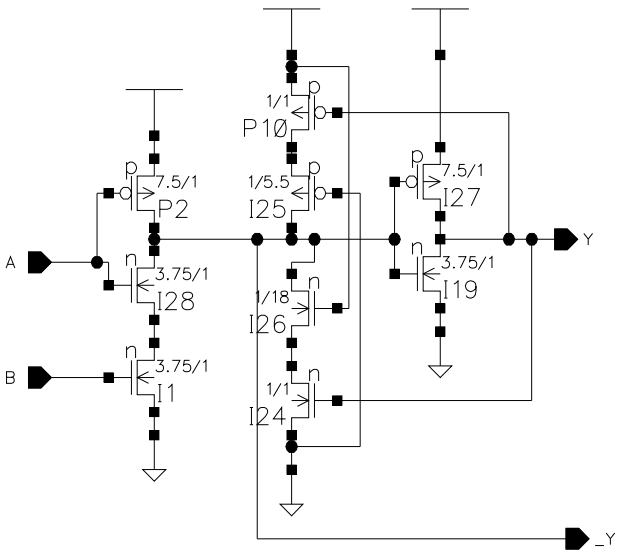
1/1
P10
p
7.5/1
P2
1/5.5
I25
7.5/1
I27
A
n
3.75/1
I28
1/18
I26
3.75/1
I19
Y
B
3.75/1
I1
1/1
I24
_Y

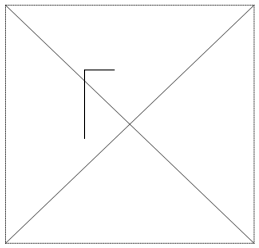

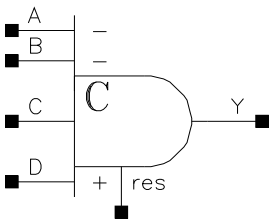
A
B
C
D
C
Y
–
–
+
res

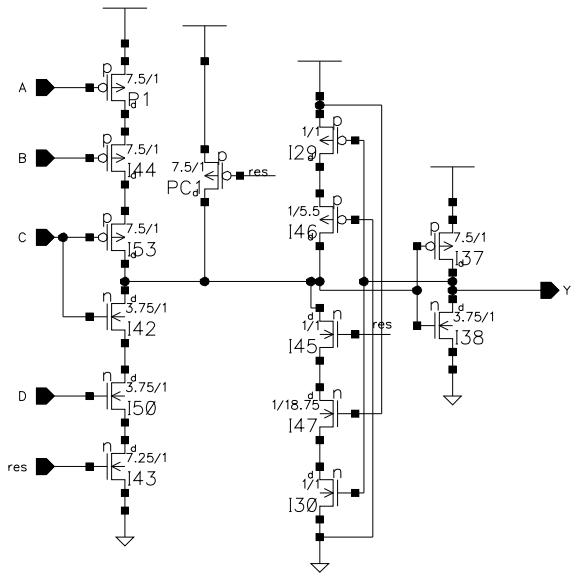
A
B
C
D
res
7.5/1
P1
7.5/1
I44
7.5/1
I53
3.75/1
I42
3.75/1
I50
7.25/1
I43
7.5/1
PC1
res
1/1
I29
1/5.5
I46
1/1
I45
1/18.75
I47
1/1
I30
7.5/1
I37
3.75/1
I38
res
Y

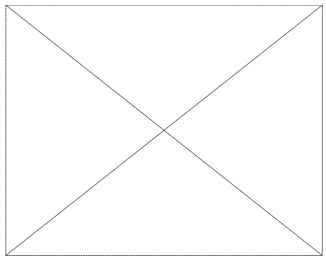

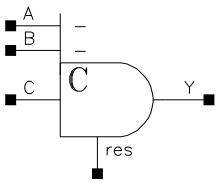
A
B
C
C
Y
res

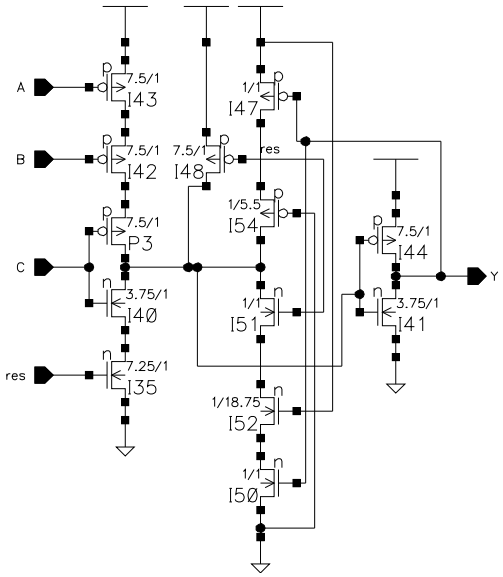
A
B
C
res
Y
7.5/1
I43
7.5/1
I42
7.5/1
P3
3.75/1
I40
7.25/1
I35
7.5/1
I48
1/1
I47
1/5.5
I54
1/1
I51
1/18.75
I52
1/1
I50
7.5/1
I44
3.75/1
I41

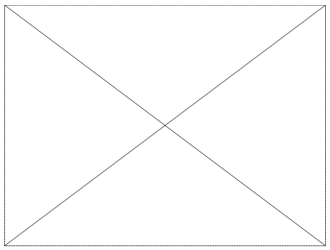

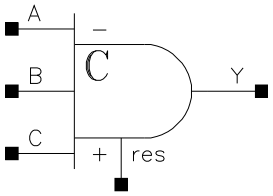
A
B
C
Y
res

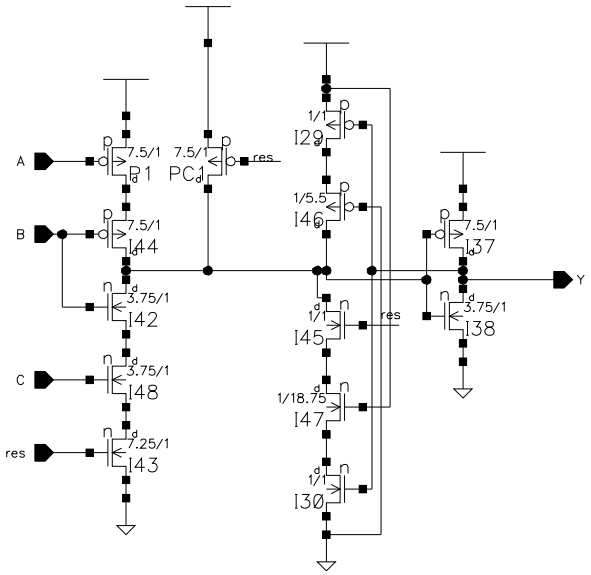
A
B
C
res
Y
7.5/1
P1
PC1
I44
I42
I48
I43
I29
I46
I45
I47
I30
I37
I38
1/1
1/5.5
3.75/1
7.25/1
1/18.75

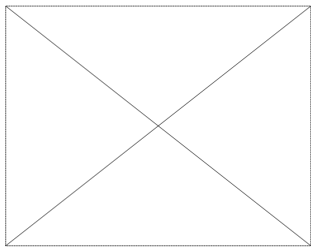

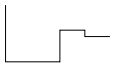

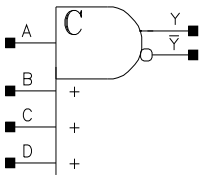
C
A
B
C
D
Y
Y

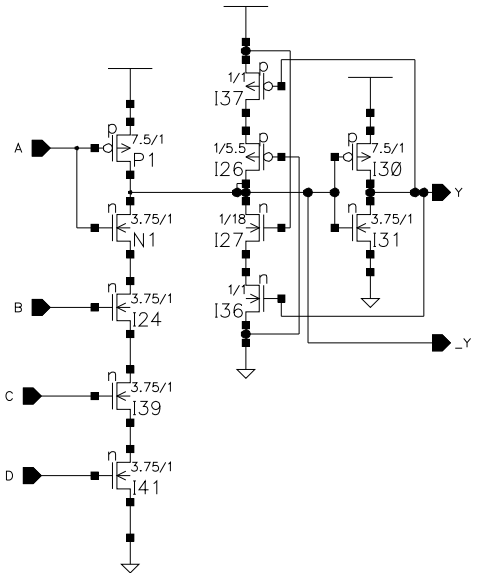
A
B
C
D
P1
N1
I24
I39
I41
I37
I26
I27
I36
I30
I31
7.5/1
3.75/1
1/1
1/5.5
1/18
Y
_Y

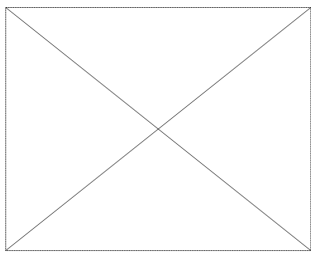

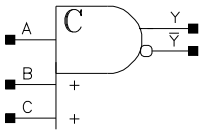
C
A
B
C
Y
Y
+
+

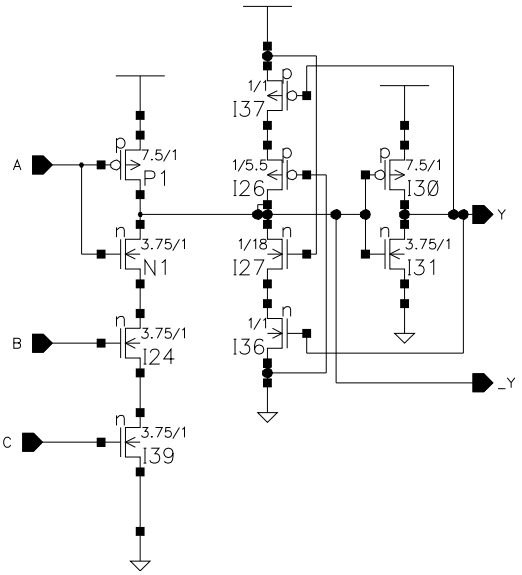
A
B
C
P1
N1
I24
I39
I37
I26
I27
I36
I30
I31
1/1
1/5.5
1/18
1/1
7.5/1
3.75/1
3.75/1
3.75/1
7.5/1
3.75/1
Y
_Y

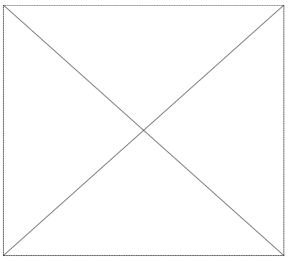

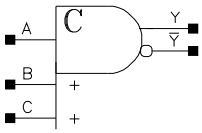
C
A
B
C
Y
Y
+
+

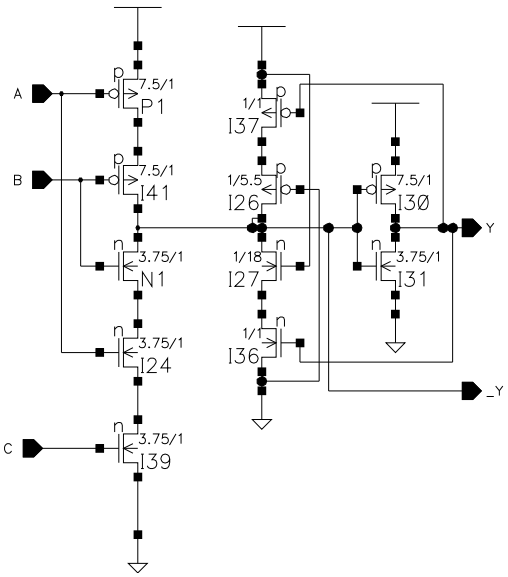
A
B
C
p
7.5/1
P1
p
7.5/1
I41
n
3.75/1
N1
n
3.75/1
I24
n
3.75/1
I39
p
1/1
I37
p
1/5.5
I26
n
1/18
I27
n
1/1
I36
p
7.5/1
I30
n
3.75/1
I31
Y
_Y

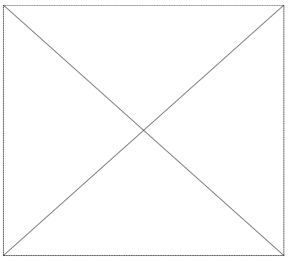

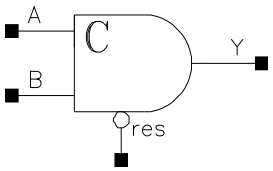
A
B
C
Y
res

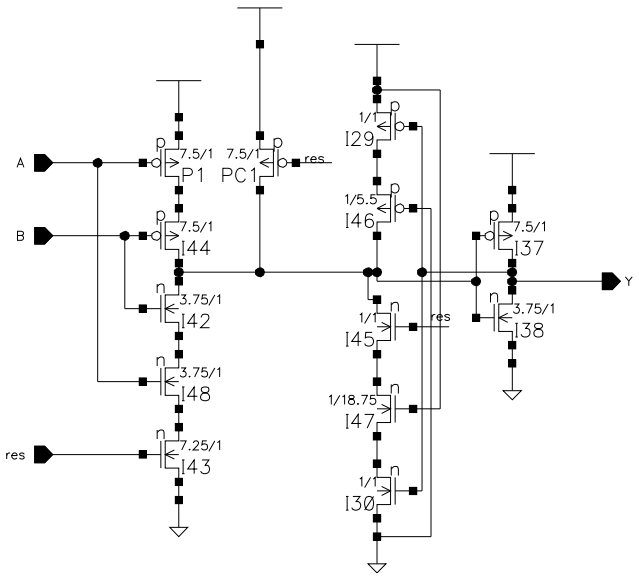
A
B
res
P1
PC1
res
I44
I42
I48
I43
I29
I46
I45
I47
I30
I37
I38
Y
7.5/1
3.75/1
7.25/1
1/1
1/5.5
1/18.75

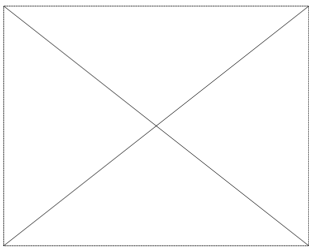

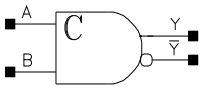
A
B
C
Y
Y

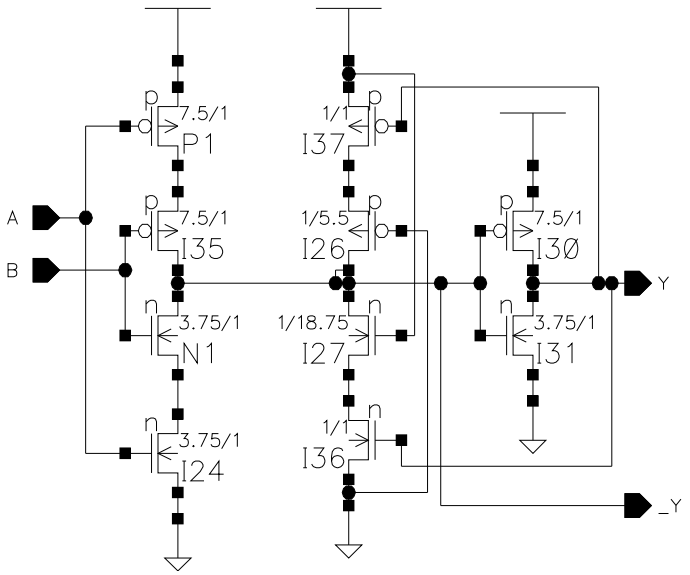
p
7.5/1
P1
p
7.5/1
I35
n
3.75/1
N1
n
3.75/1
I24
1/1
I37
1/5.5
I26
1/18.75
I27
1/1
I36
p
7.5/1
I30
n
3.75/1
I31
A
B
Y
_Y

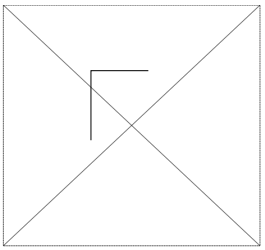

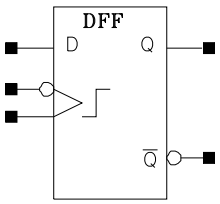
DFF
D
Q
Q

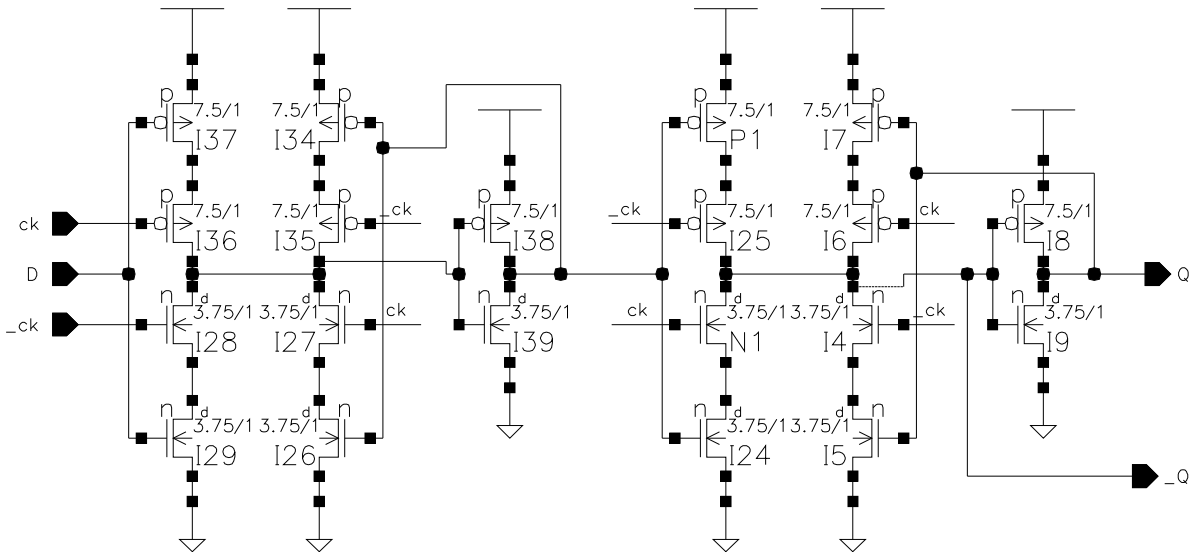
ck
D
_ck
p
n
d
7.5/1
3.75/1
I37
I34
I36
I35
I38
I28
I27
I39
I29
I26
P1
I7
I25
I6
I8
N1
I4
I9
I24
I5
Q
_Q

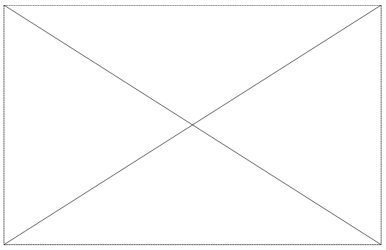

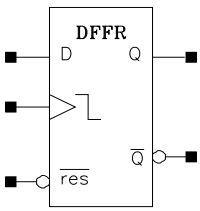
DFFR
D
Q
Q
res

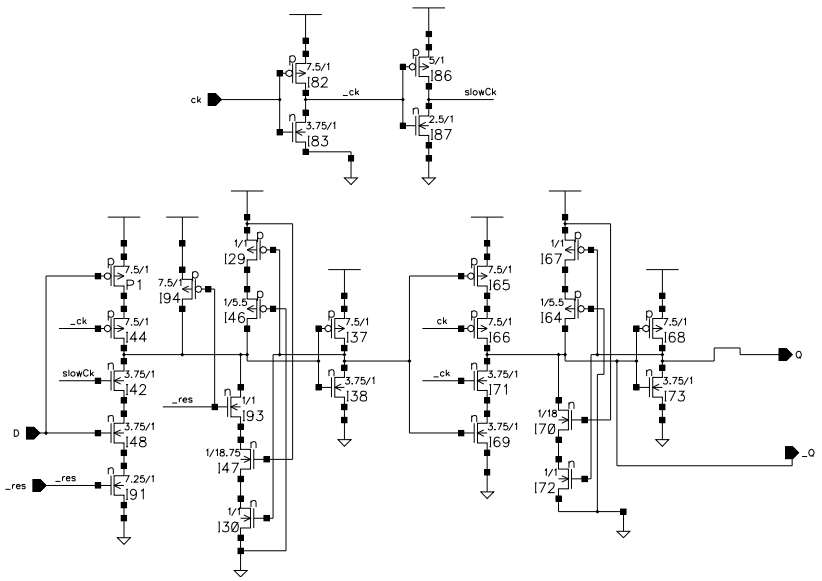
ck
_ck
slowCk
7.5/1
182
3.75/1
183
5/1
186
2.5/1
187
7.5/1
P1
_ck
7.5/1
144
slowCk
3.75/1
142
D
3.75/1
148
_res
_res
7.25/1
191
7.5/1
194
1/1
129
1/5.5
146
_res
1/1
193
1/18.75
147
1/1
130
7.5/1
137
3.75/1
138
7.5/1
165
ck
7.5/1
166
_ck
3.75/1
171
3.75/1
169
1/1
167
1/5.5
164
1/18
170
1/1
172
7.5/1
168
3.75/1
173
Q
_Q

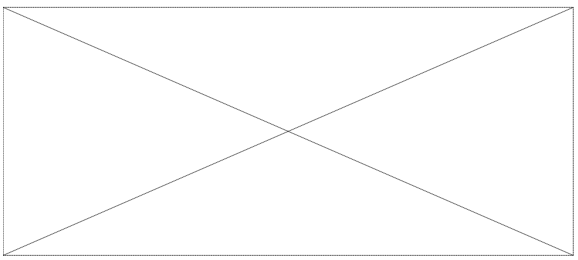

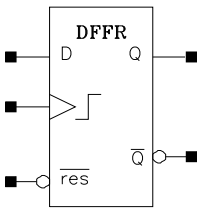
DFFR
D
Q
Q̄
res

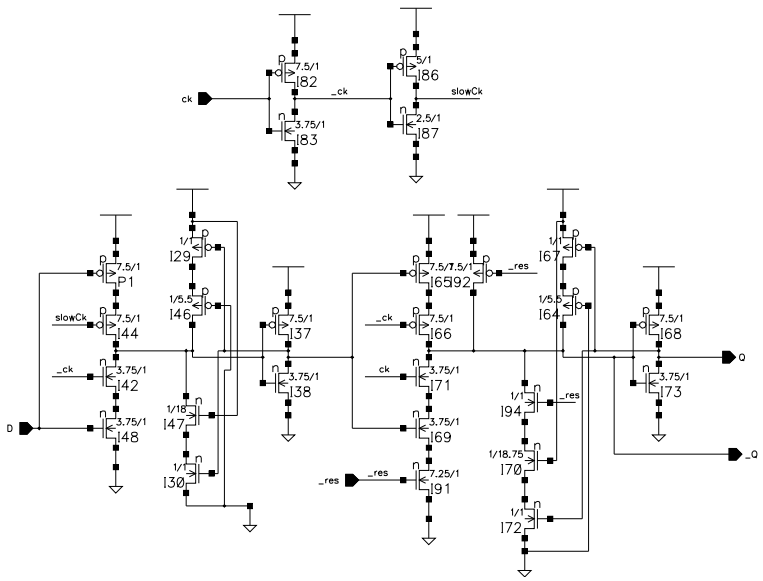
ck
_ck
slowCk
7.5/1
182
3.75/1
183
5/1
186
2.5/1
187
D
7.5/1
P1
slowCk
7.5/1
144
_ck
3.75/1
142
3.75/1
148
1/1
129
1/5.5
146
1/18
147
1/1
130
7.5/1
137
3.75/1
138
_ck
7.5/1
165
7.5/1
192
_res
7.5/1
166
ck
3.75/1
171
3.75/1
169
_res
_res
7.25/1
191
1/1
167
1/5.5
164
1/1
194
_res
1/18.75
170
1/1
172
7.5/1
168
3.75/1
173
Q
_Q

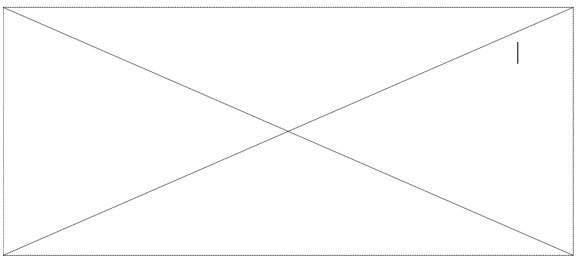

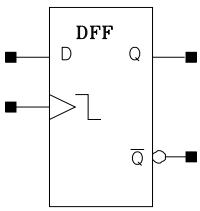
DFF
D
Q
Q

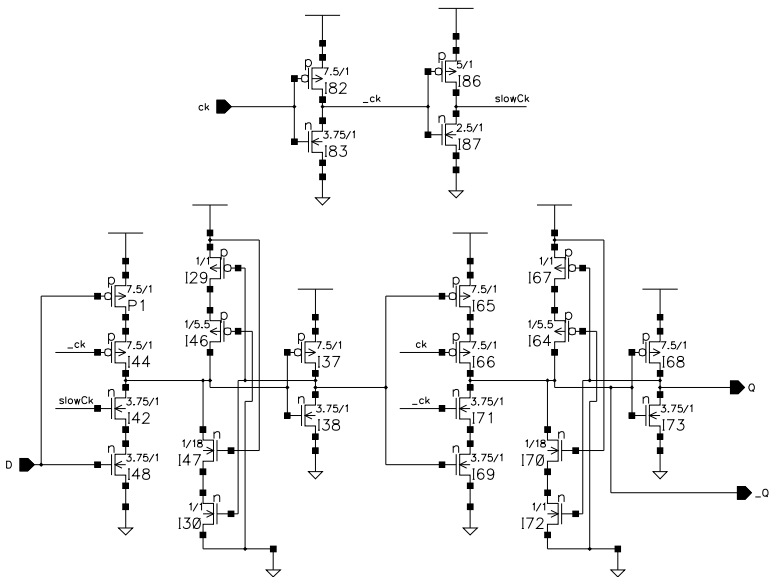
ck
_ck
slowCk
7.5/1
I82
3.75/1
I83
5/1
I86
2.5/1
I87
D
7.5/1
I1
_ck
7.5/1
I44
slowCk
3.75/1
I42
3.75/1
I48
1/1
I29
1/5.5
I46
1/18
I47
1/1
I30
7.5/1
I37
3.75/1
I38
7.5/1
I65
ck
7.5/1
I66
_ck
3.75/1
I71
3.75/1
I69
1/1
I67
1/5.5
I64
1/18
I70
1/1
I72
7.5/1
I68
3.75/1
I73
Q
_Q

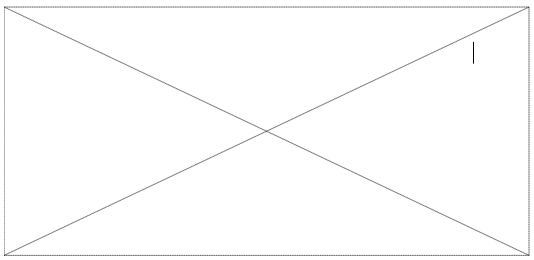

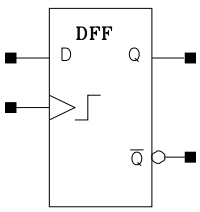
DFF
D
Q
Q

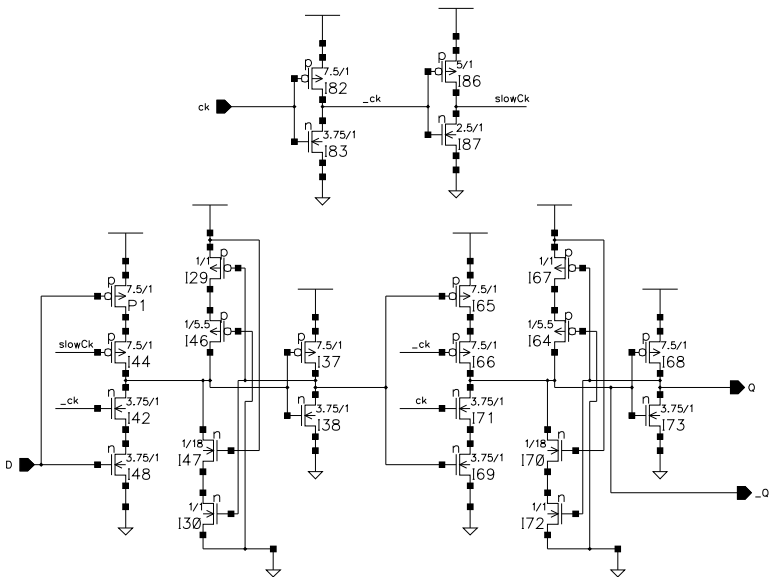
ck
_ck
slowCk
7.5/1
I82
3.75/1
I83
5/1
I86
2.5/1
I87
slowCk
_ck
D
7.5/1
P1
7.5/1
I44
3.75/1
I42
3.75/1
I48
1/1
I29
1/5.5
I46
1/18
I47
1/1
I30
7.5/1
I37
3.75/1
I38
7.5/1
I65
7.5/1
I66
3.75/1
I71
3.75/1
I69
1/1
I67
1/5.5
I64
1/18
I70
1/1
I72
7.5/1
I68
3.75/1
I73
Q
_Q

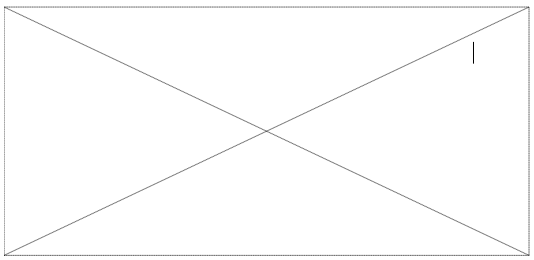

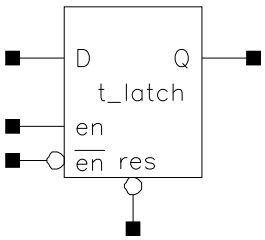
D
Q
t_latch
en
en
res

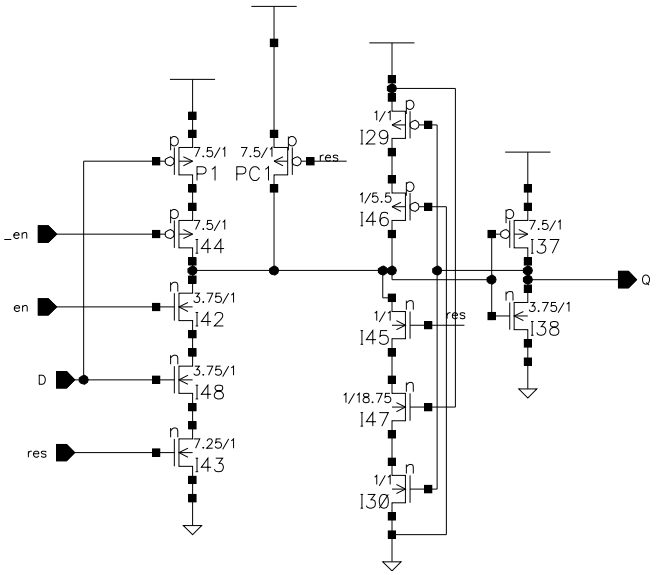
7.5/1
P1
7.5/1
PC1
res
_en
7.5/1
I44
en
3.75/1
I42
D
3.75/1
I48
res
7.25/1
I43
1/1
I29
1/5.5
I46
1/1
I45
1/18.75
I47
1/1
I30
7.5/1
I37
3.75/1
I38
Q

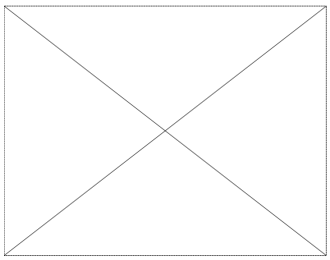

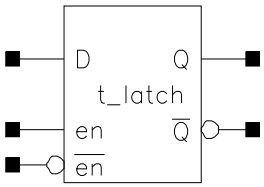
D
Q
t_latch
en
Q
en

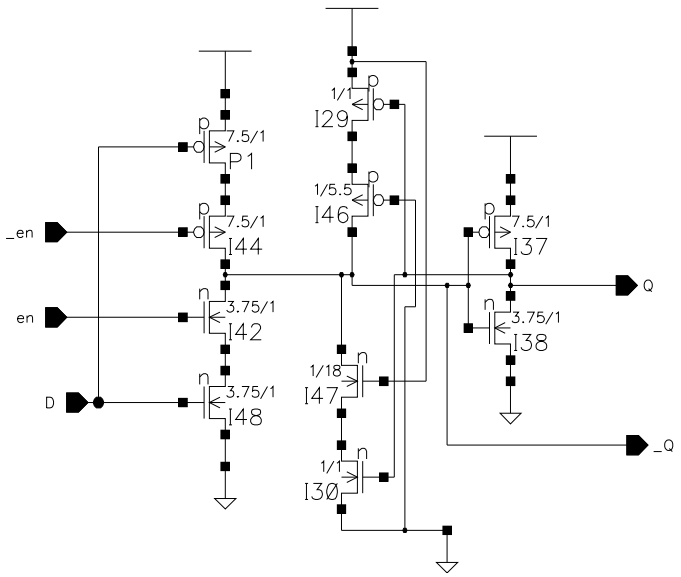
p
7.5/1
P1
p
7.5/1
I44
n
3.75/1
I42
n
3.75/1
I48
_en
en
D
1/1
I29
p
1/5.5
I46
p
1/18
I47
n
1/1
I30
n
p
7.5/1
I37
n
3.75/1
I38
Q
_Q

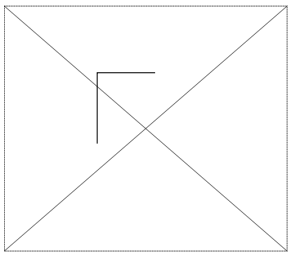

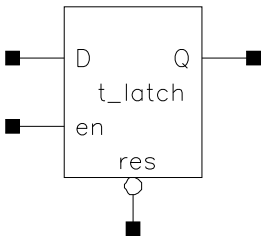
D
Q
t_latch
en
res

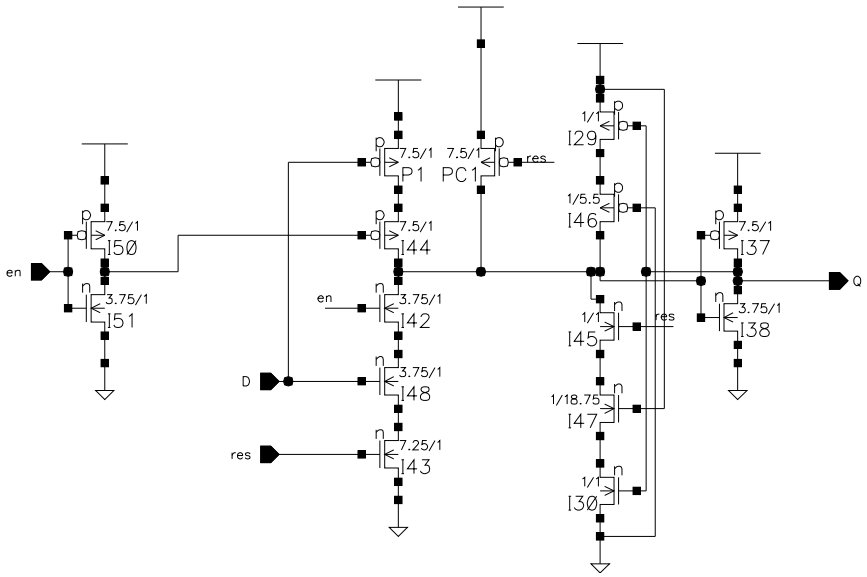
7.5/1
I50
3.75/1
I51
en
7.5/1
P1
7.5/1
I44
en
3.75/1
I42
D
3.75/1
I48
res
7.25/1
I43
7.5/1
PC1
res
1/1
I29
1/5.5
I46
1/1
I45
1/18.75
I47
1/1
I30
7.5/1
I37
3.75/1
I38
res
Q

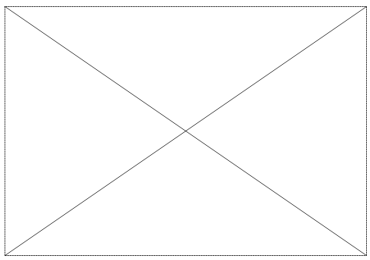

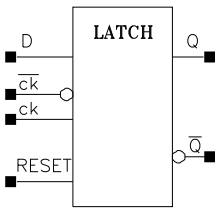
LATCH
D
Q
ck
ck
RESET
Q

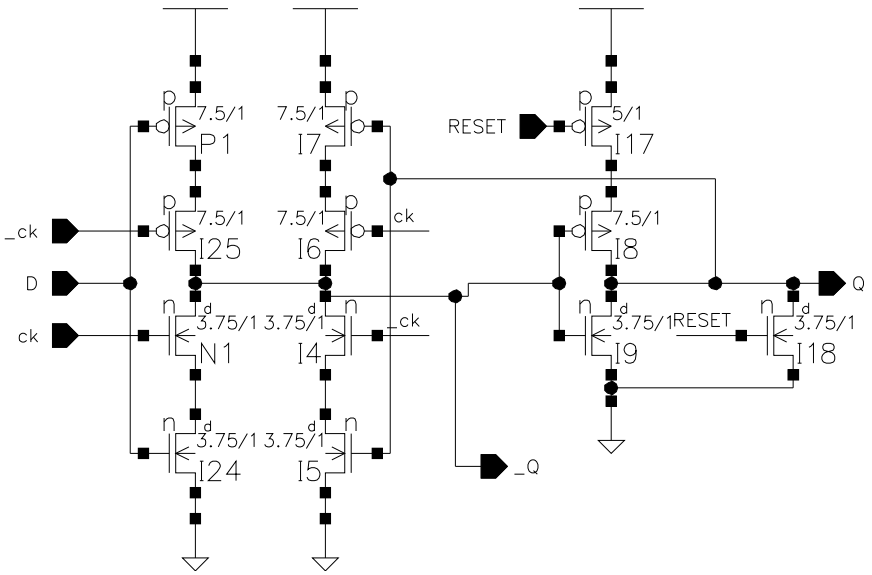
p
7.5/1
P1
I7
RESET
5/1
I17
I25
I6
I8
_ck
ck
D
Q
n
d
3.75/1
N1
I4
I9
I18
I24
I5
_Q

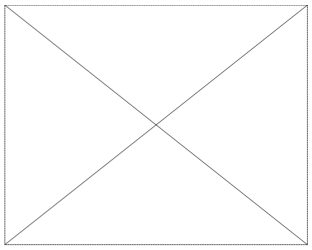

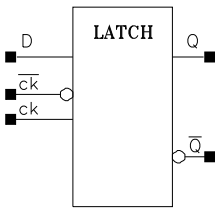
LATCH
D
Q
ck
ck
Q

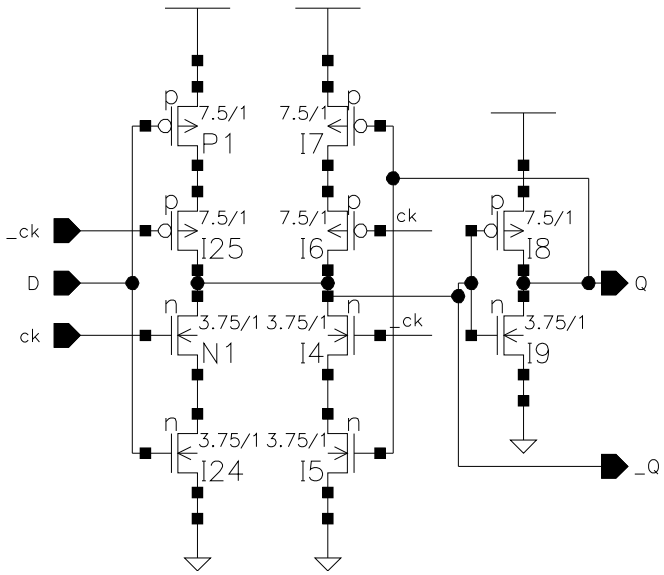
p
7.5/1
P1
I7
I25
I6
I8
_ck
D
ck
Q
n
3.75/1
N1
I4
I9
I24
I5
_Q

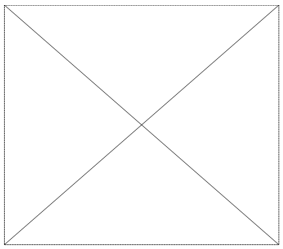

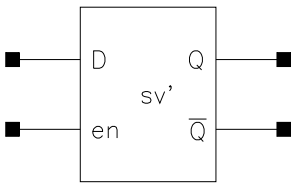
D
Q
sv'
en
$\overline{Q}$

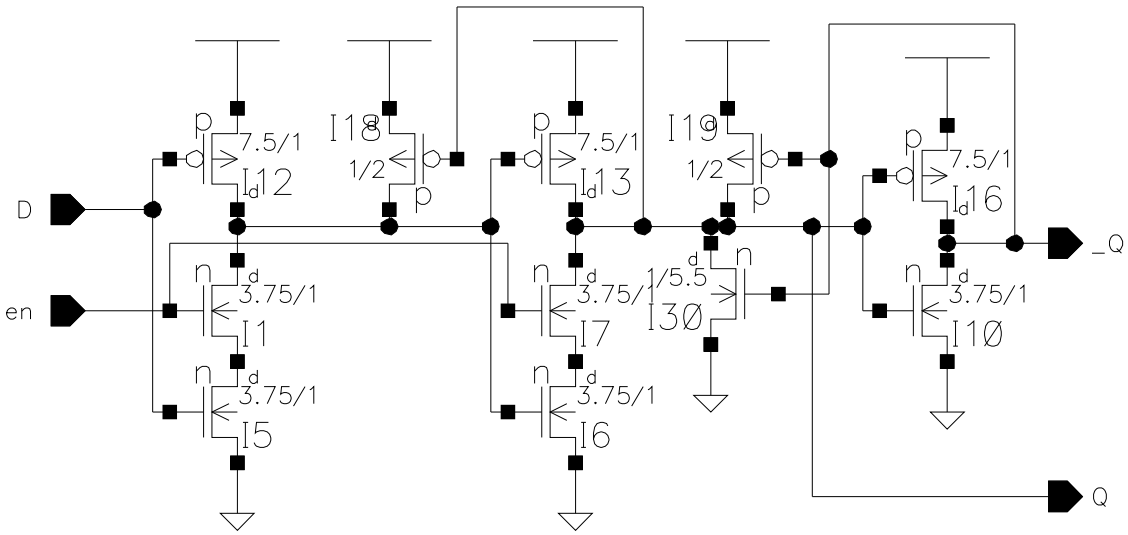
D
en
p
7.5/1
I12
I18
1/2
p
p
7.5/1
I13
I19
1/2
p
p
7.5/1
I16
n
3.75/1
I1
n
3.75/1
I5
n
3.75/1
I7
n
3.75/1
I6
n
1/5.5
I3Ø
n
3.75/1
I1Ø
_Q
Q

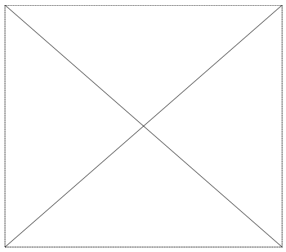

-

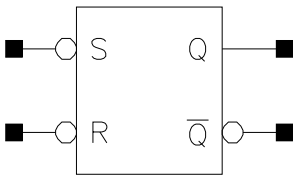
S
Q
R
$\overline{Q}$

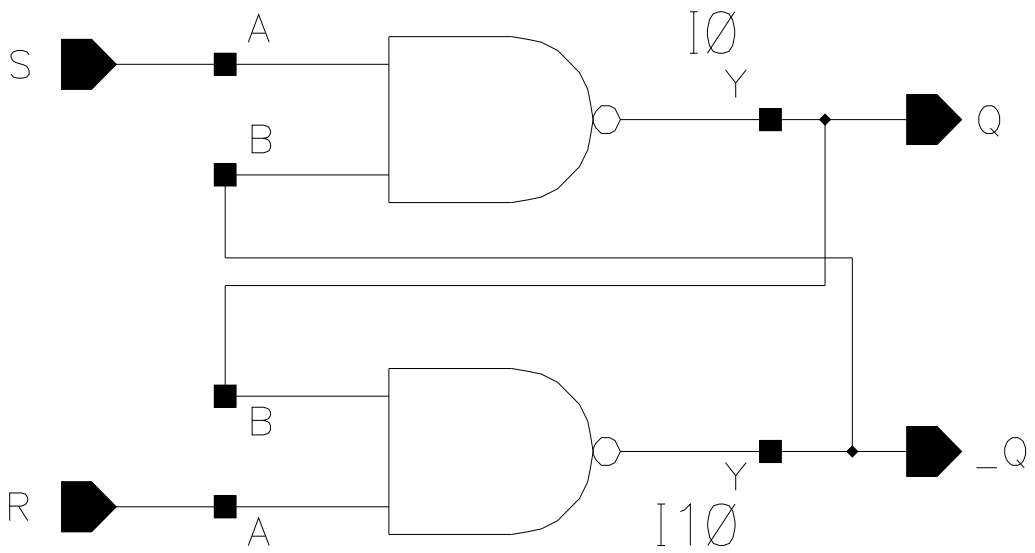
S
A
B
IØ
Y
Q
B
R
A
Y
I1Ø
_Q

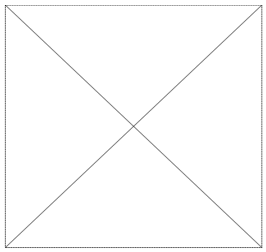

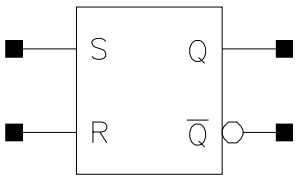
S
Q
R
Q

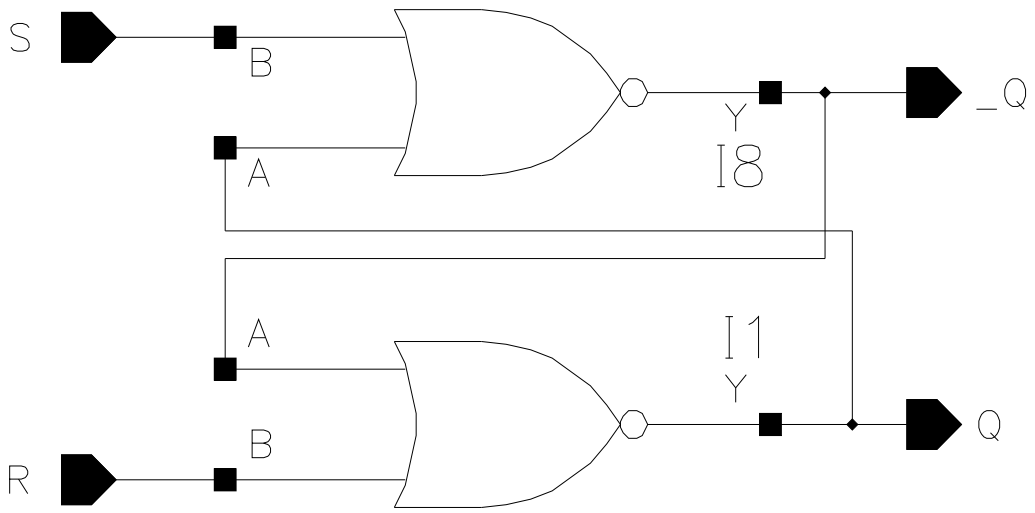
S
B
A
Y
I8
_Q
A
I1
Y
Q
B
R

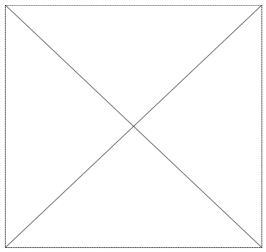

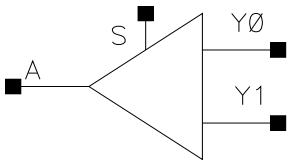
S
A
YØ
Y1

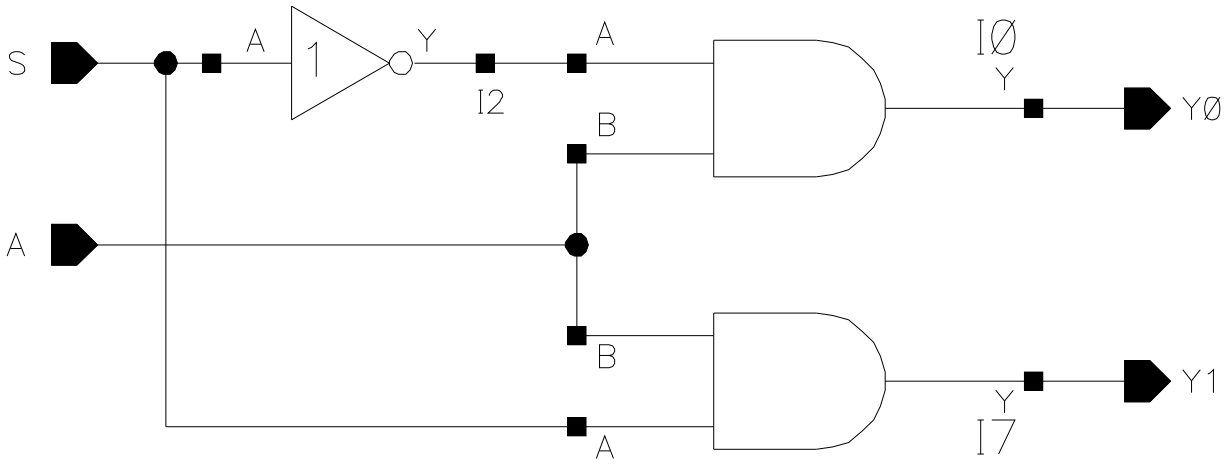
S
A
1
Y
I2
A
B
IØ
Y
YØ
A
B
Y
I7
A
Y1

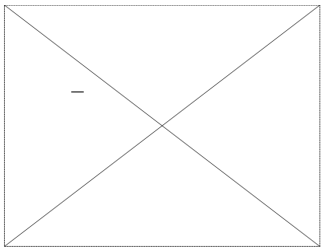
-

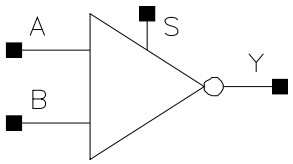
A
S
Y
B

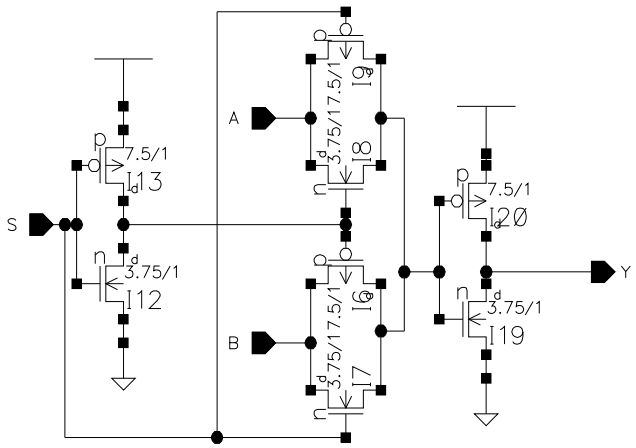
A
S
B
Y
p
n
d
7.5/1
3.75/1
3.75/17.5/1
I13
I12
I9
I8
I6
I7
I20
I19

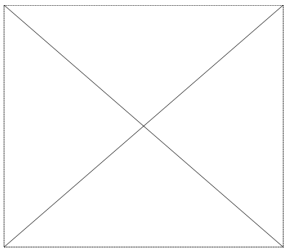

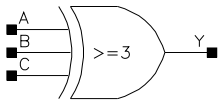
A
B
C
>=3
Y

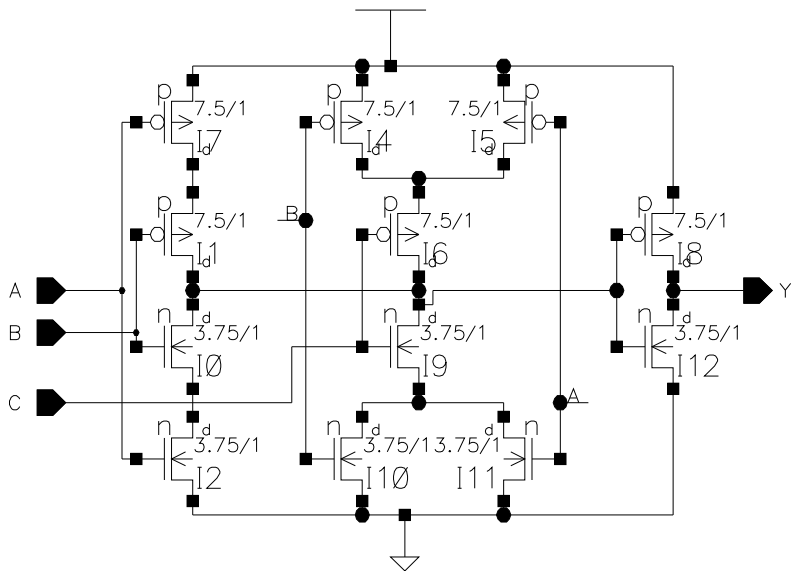
p
7.5/1
I7
I4
I5
I1
I6
I8
B
A
Y
n
d
3.75/1
I0
I9
I12
C
I2
I10
I11

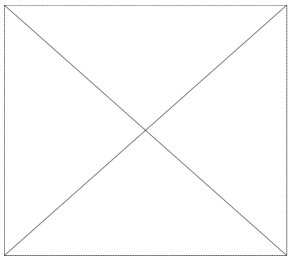

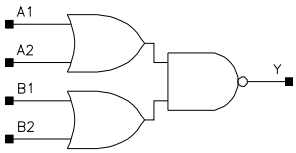
A1
A2
B1
B2
Y

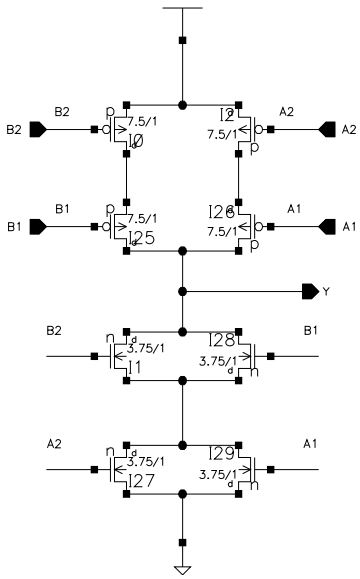
B2
B2
7.5/1
A2
A2
7.5/1
B1
B1
7.5/1
A1
A1
7.5/1
Y
B2
3.75/1
B1
3.75/1
A2
3.75/1
A1
3.75/1

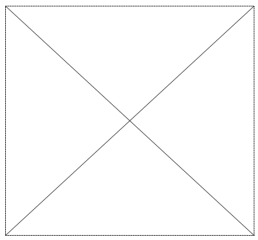

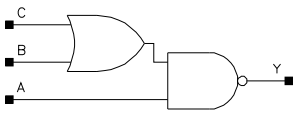
C
B
A
Y

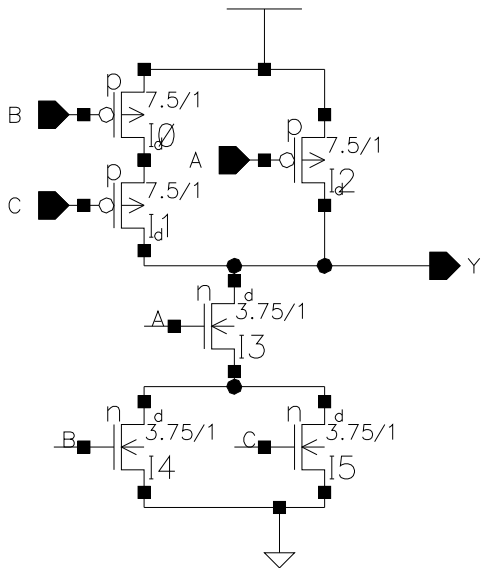
p
7.5/1
I0
B
p
7.5/1
I2
A
p
7.5/1
I1
C
Y
n
d
3.75/1
I3
A
n
d
3.75/1
I4
B
n
d
3.75/1
I5
C

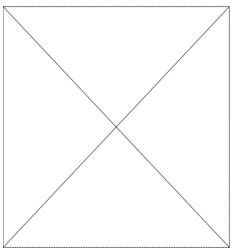

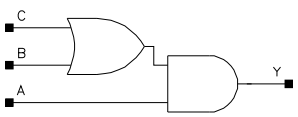
C
B
A
Y

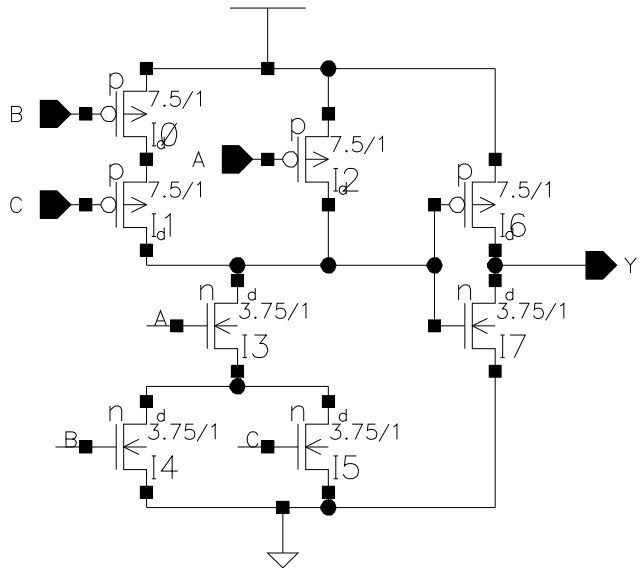
p
7.5/1
I0
B
p
7.5/1
I1
C
p
7.5/1
I2
A
p
7.5/1
I6
Y
n
d
3.75/1
I3
A
n
d
3.75/1
I7
n
d
3.75/1
I4
B
n
d
3.75/1
I5
C

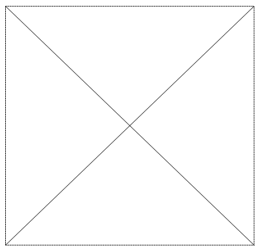

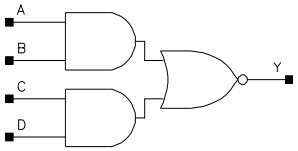
A
B
C
D
Y

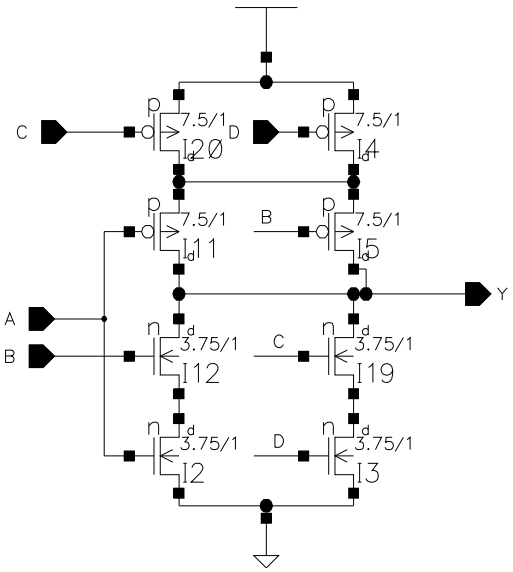
C
D
B
A
B
Y
p
n
d
7.5/1
3.75/1
I20
I4
I11
I5
I12
I19
I2
I3

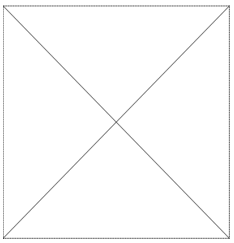

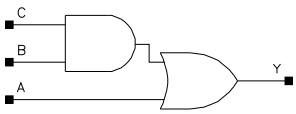
C
B
A
Y

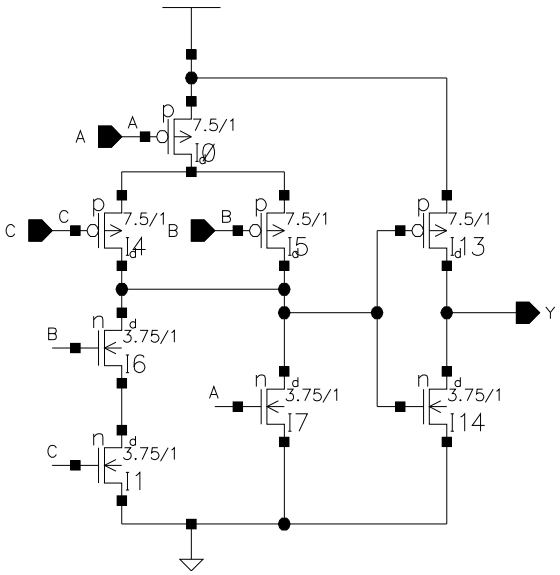
A
A
p
7.5/1
I0
C
C
p
7.5/1
I4
B
B
p
7.5/1
I5
p
7.5/1
I13
Y
B
n
d
3.75/1
I6
A
n
d
3.75/1
I7
n
d
3.75/1
I14
C
n
d
3.75/1
I1

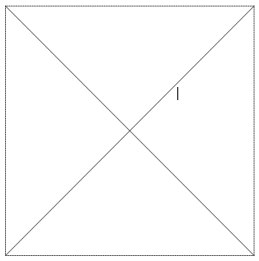
I

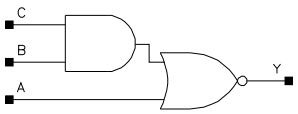
C
B
A
Y

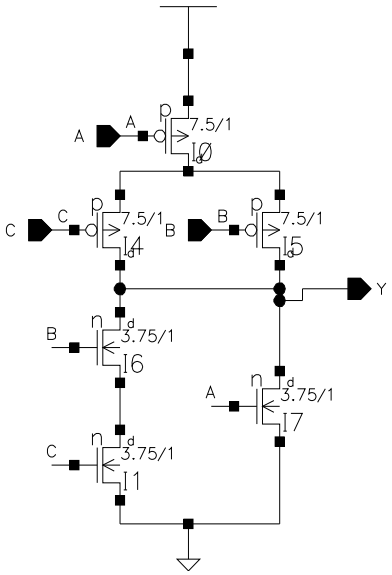
A
A
p
7.5/1
I0
C
C
p
7.5/1
I4
B
B
p
7.5/1
I5
Y
B
n
d
3.75/1
I6
A
n
d
3.75/1
I7
C
n
d
3.75/1
I1

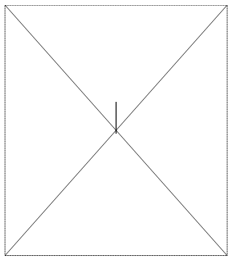

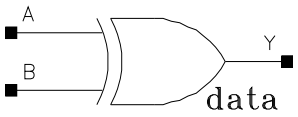
A
B
Y
data

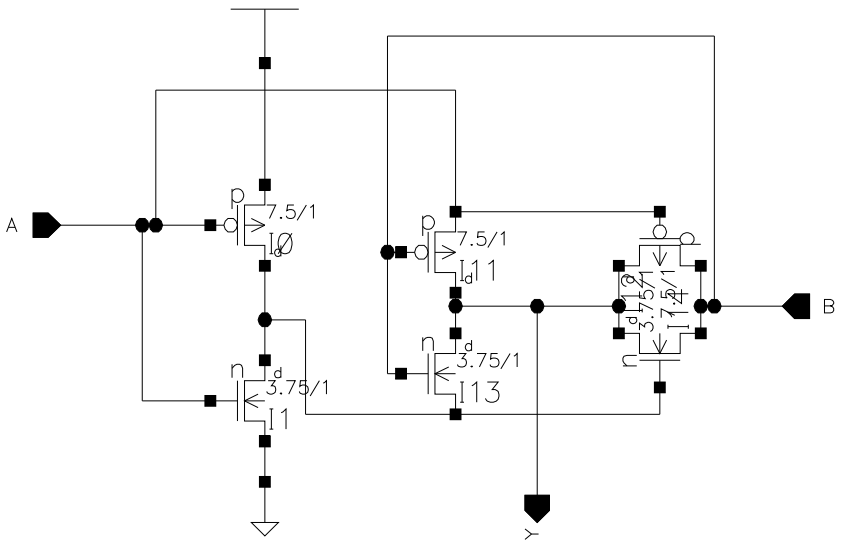
A
B
Y
p
7.5/1
I0
n
d
3.75/1
I1
p
7.5/1
I11
n
d
3.75/1
I13
p
7.5/1
I14
n
d
3.75/1
I12

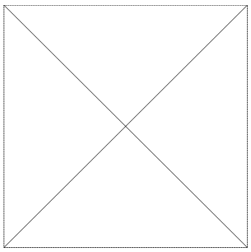

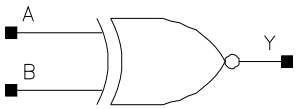
A
B
Y

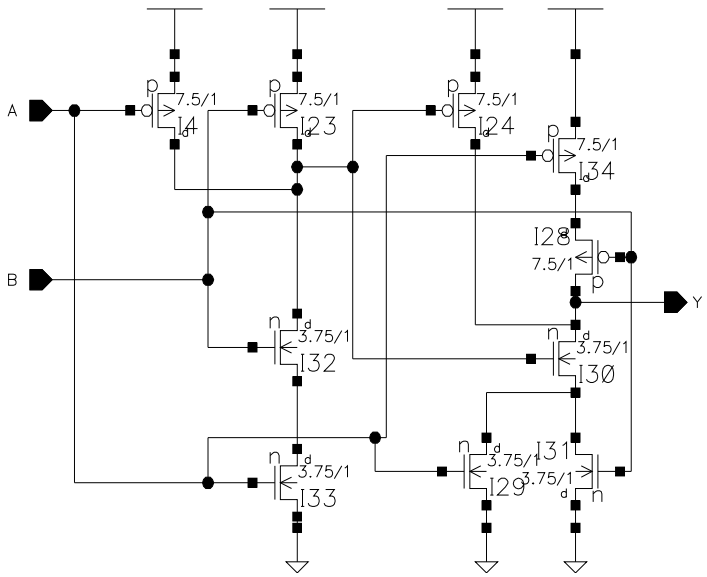
A
B
Y
p
7.5/1
I4
I23
I24
I34
I28
n
3.75/1
I32
I30
I33
I29
I31

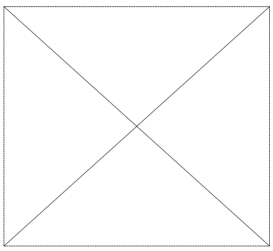

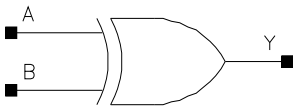
A
B
Y

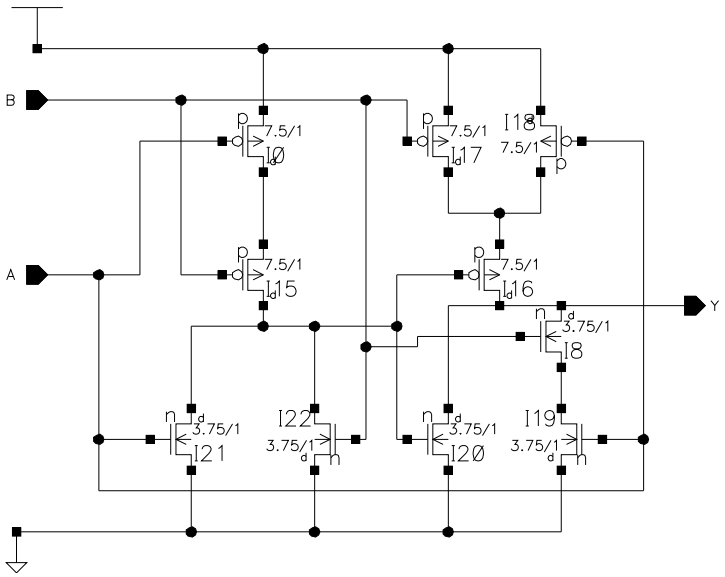
B
A
Y
p
7.5/1
I0
I17
I18
I15
I16
n
3.75/1
I8
I21
I22
I20
I19

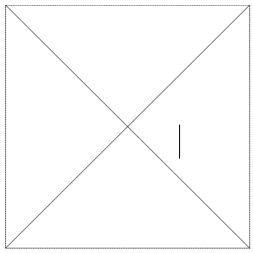

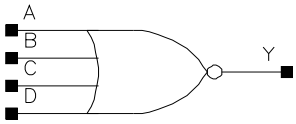
A
B
C
D
Y

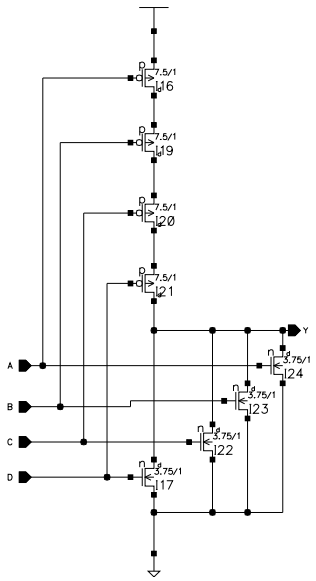
7.5/1
I16
7.5/1
I19
7.5/1
I20
7.5/1
I21
Y
A
B
C
D
3.75/1
I24
3.75/1
I23
3.75/1
I22
3.75/1
I17

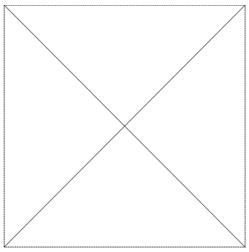

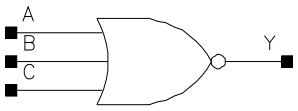
A
B
C
Y

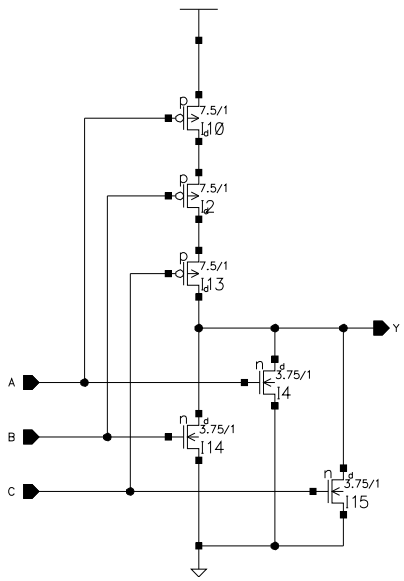
p
7.5/1
M0
p
7.5/1
M2
p
7.5/1
M3
Y
A
n
3.75/1
M4
B
n
3.75/1
M14
C
n
3.75/1
M15

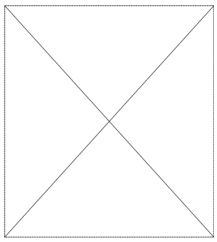

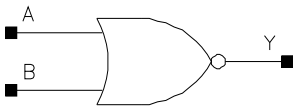
A
B
Y

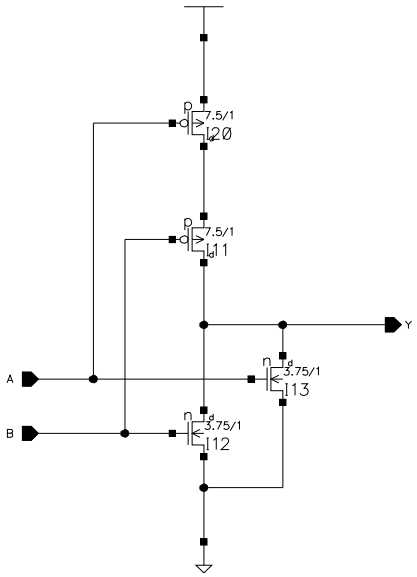
p
7.5/1
I20
p
7.5/1
I11
Y
A
n
3.75/1
I13
B
n
3.75/1
I12

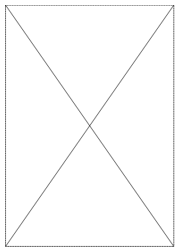

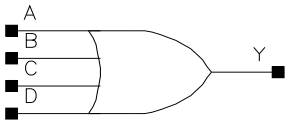
A
B
C
D
Y

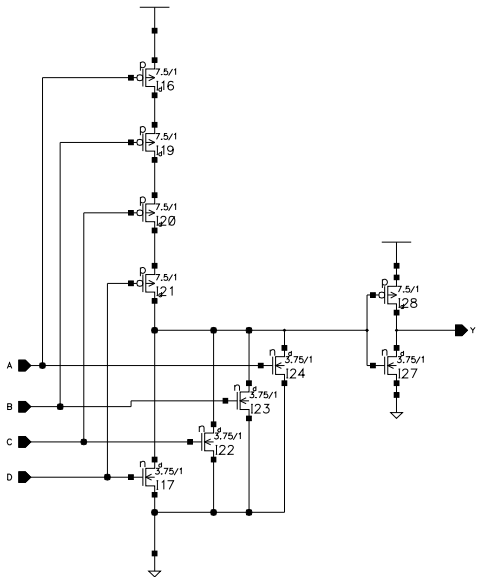
7.5/1
I16
7.5/1
I19
7.5/1
I20
7.5/1
I21
7.5/1
I28
Y
3.75/1
I24
3.75/1
I27
3.75/1
I23
3.75/1
I22
3.75/1
I17
A
B
C
D

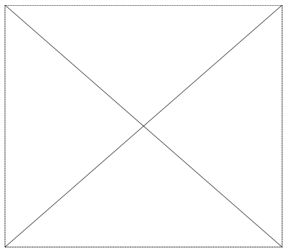

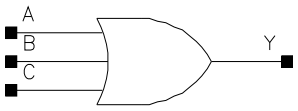
A
B
C
Y

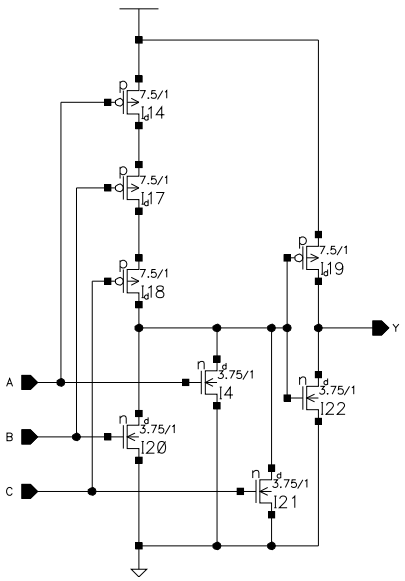
p
7.5/1
M14
p
7.5/1
M17
p
7.5/1
M18
p
7.5/1
M19
Y
A
n
3.75/1
M4
n
3.75/1
M22
B
n
3.75/1
M20
C
n
3.75/1
M21

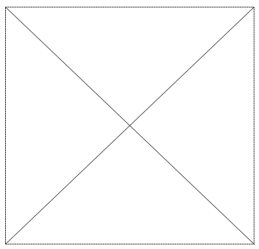

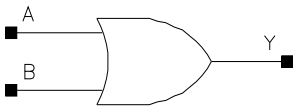
A
B
Y

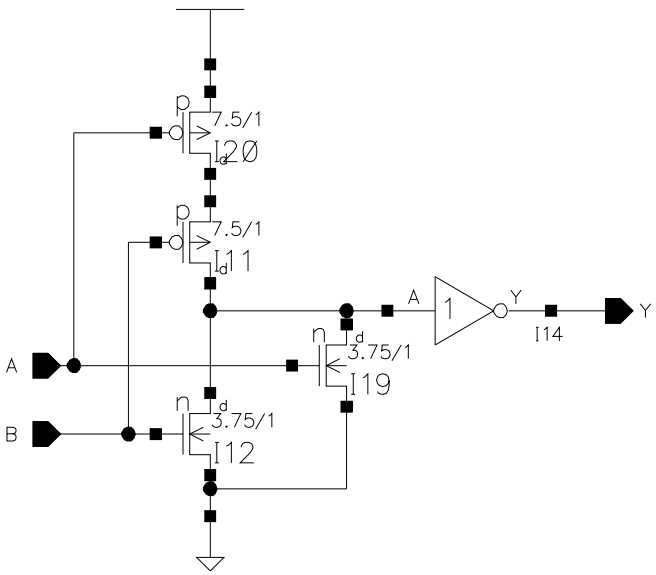
p
7.5/1
I20
p
7.5/1
I11
A
1
Y
Y
I14
n
d
3.75/1
I19
A
n
d
3.75/1
I12
B

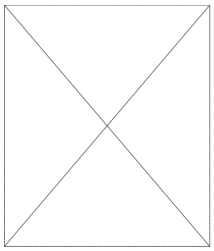

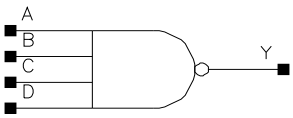
A
B
C
D
Y

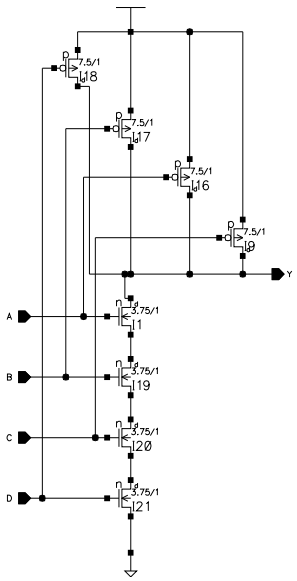
p
7.5/1
18
17
16
9
Y
n
3.75/1
1
19
20
21
A
B
C
D

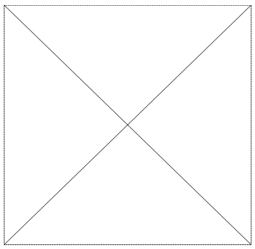

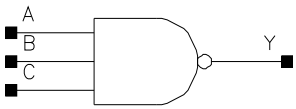
A
B
C
Y

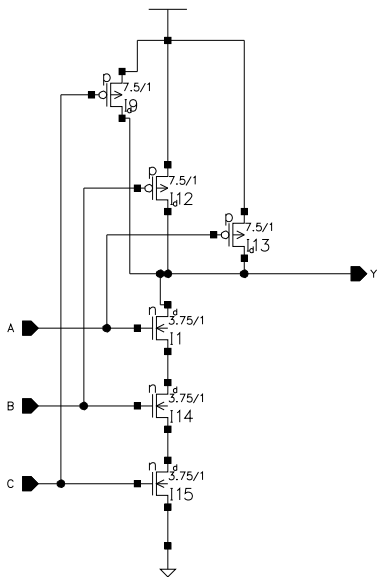
p
7.5/1
l9
p
7.5/1
l12
p
7.5/1
l13
Y
A
n
3.75/1
l1
B
n
3.75/1
l14
C
n
3.75/1
l15

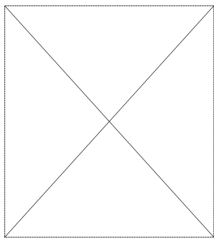

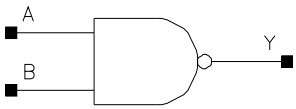
A
B
Y

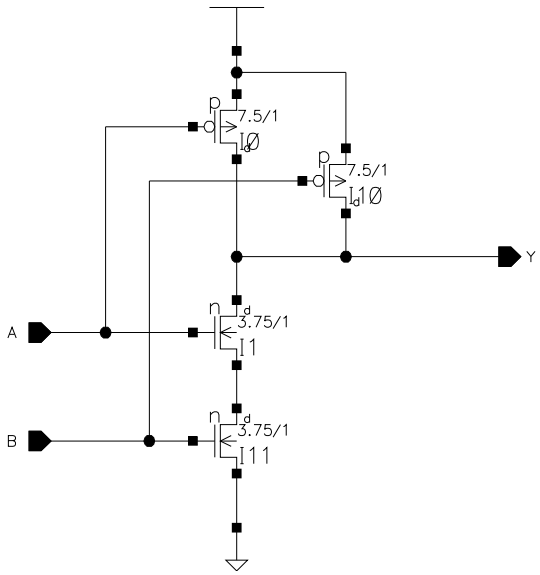
p
7.5/1
Id0
p
7.5/1
Id10
Y
n
3.75/1
Id
I1
A
n
3.75/1
Id
I11
B

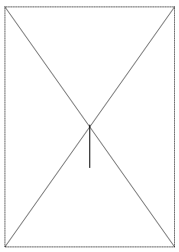

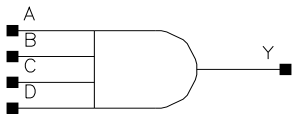
A
B
C
D
Y

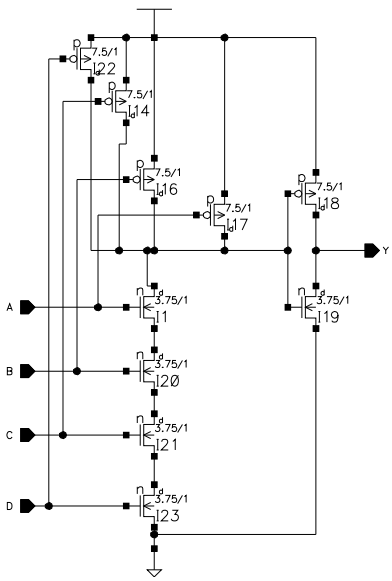
7.5/1
22
7.5/1
14
7.5/1
16
7.5/1
17
7.5/1
18
Y
3.75/1
11
3.75/1
19
A
3.75/1
20
B
3.75/1
21
C
3.75/1
23
D

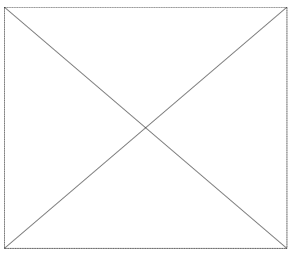

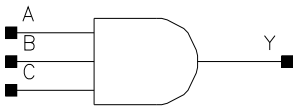
A
B
C
Y

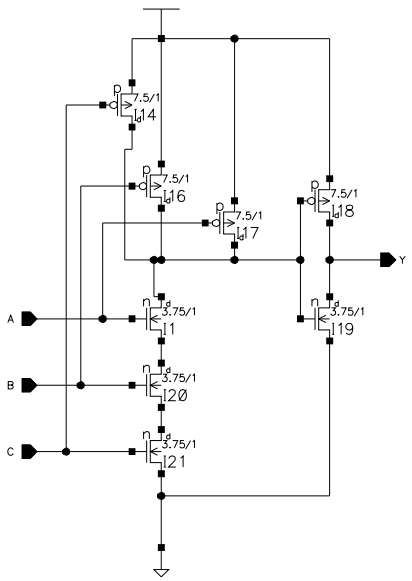
p
7.5/1
M4
p
7.5/1
M6
p
7.5/1
M7
p
7.5/1
M8
Y
A
n
3.75/1
M1
n
3.75/1
M9
B
n
3.75/1
M20
C
n
3.75/1
M21

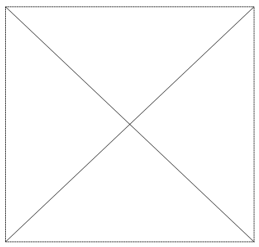

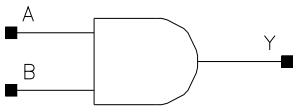
A
B
Y

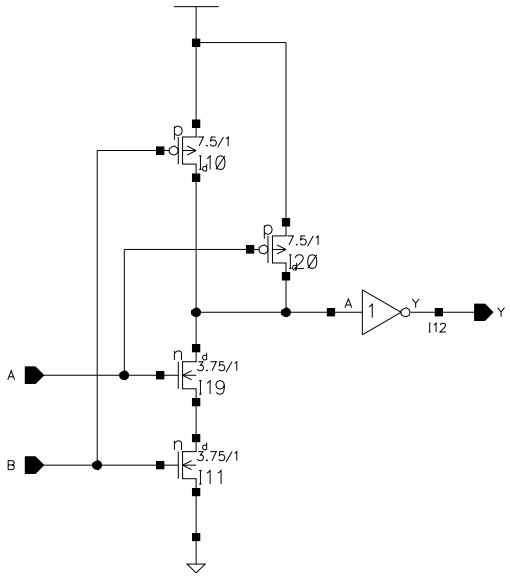
p
7.5/1
I10
p
7.5/1
I20
A
1
Y
I12
Y
n
3.75/1
I19
A
n
3.75/1
I11
B

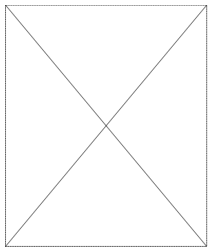

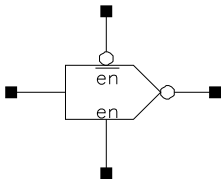
en
en

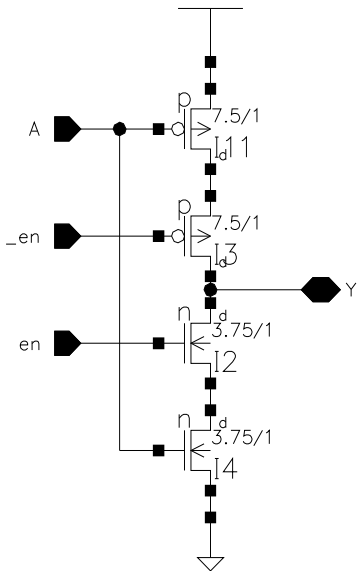
A
_en
en
Y
p
7.5/1
I1
I3
n
3.75/1
I2
I4

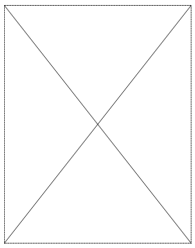

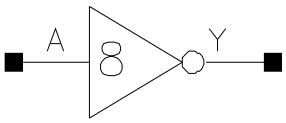
A
8
Y

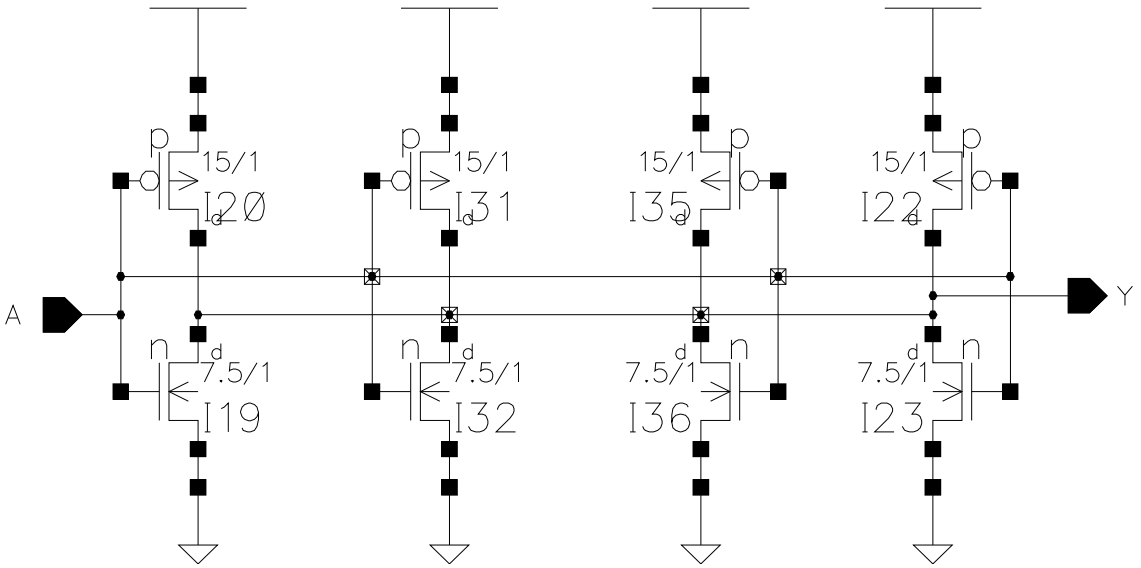
p
15/1
I20
p
15/1
I31
15/1
p
I35
15/1
p
I22
A
Y
n
d
7.5/1
I19
n
d
7.5/1
I32
d
7.5/1
n
I36
n
d
7.5/1
I23

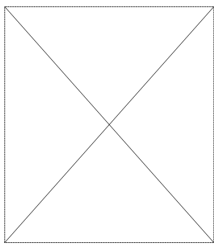

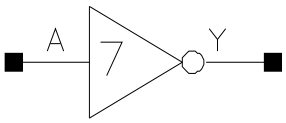
A
7
Y

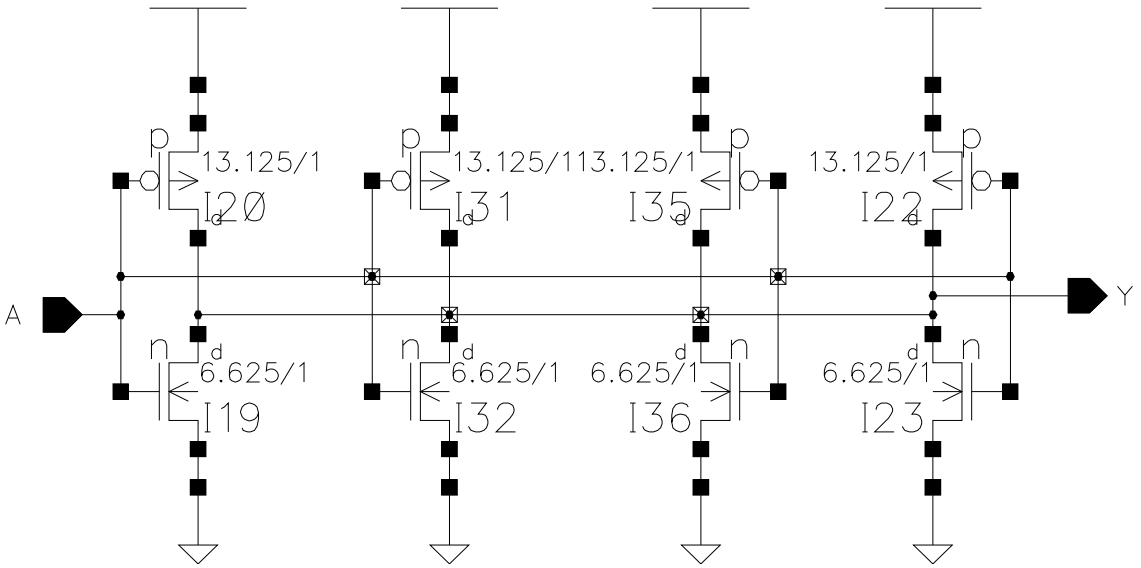
p
13.125/1
I20
p
13.125/1
I31
13.125/1
I35
p
p
13.125/1
I22
A
Y
n
d
6.625/1
I19
n
d
6.625/1
I32
d
6.625/1
I36
n
d
6.625/1
I23
n

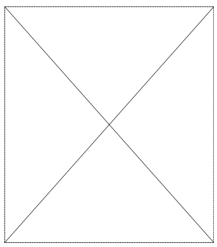

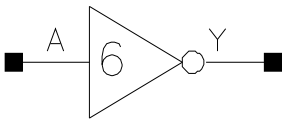
A
6
Y

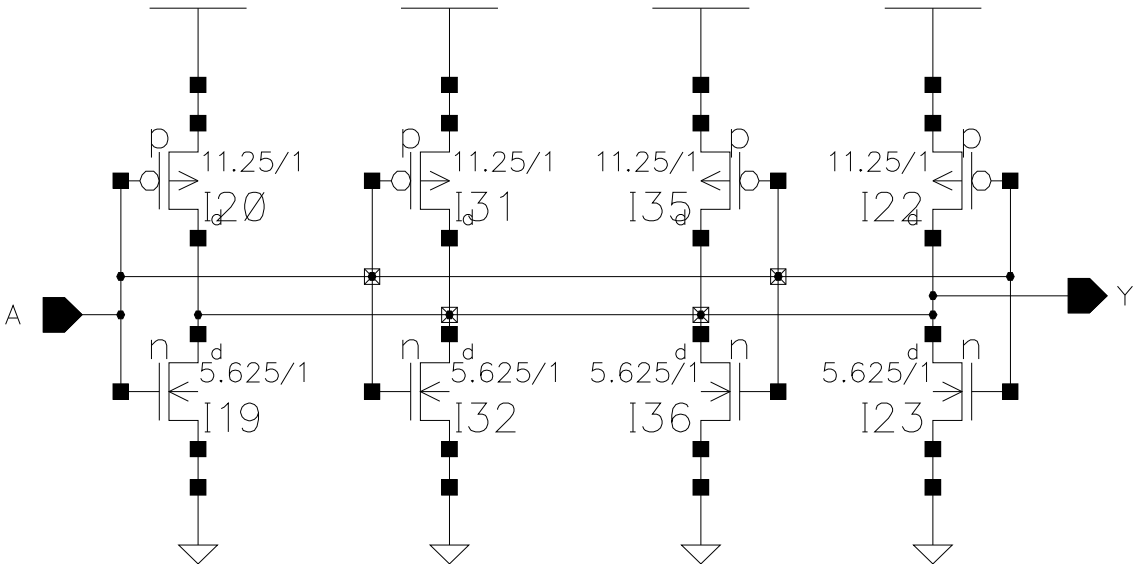
p
11.25/1
I20
p
11.25/1
I31
11.25/1
p
I35
11.25/1
p
I22
A
Y
n
d
5.625/1
I19
n
d
5.625/1
I32
d
5.625/1
n
I36
d
5.625/1
n
I23

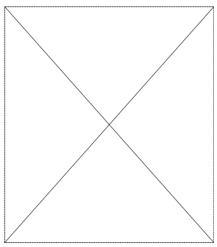

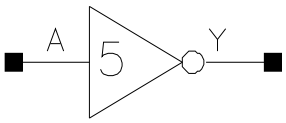
A
5
Y

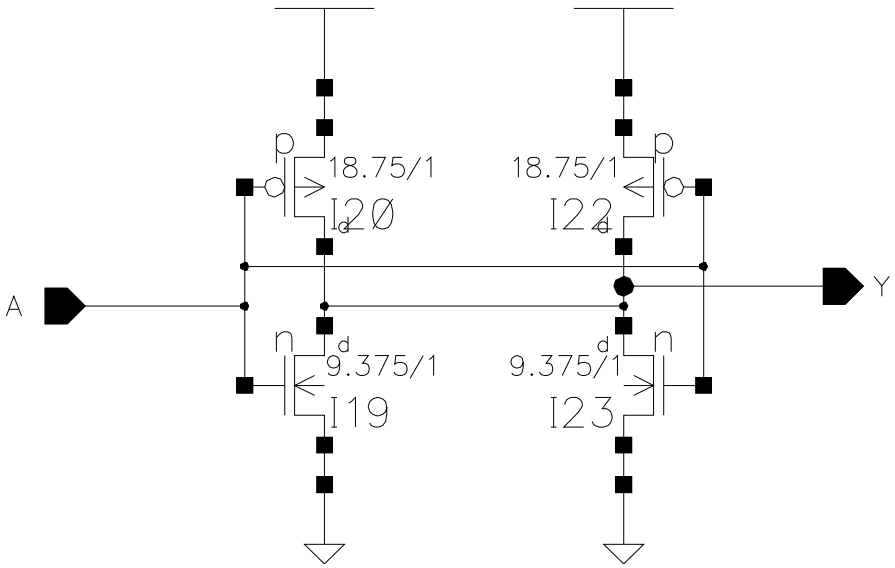
p
18.75/1
I20
18.75/1
p
I22
A
Y
n
d
9.375/1
I19
d
9.375/1
n
I23

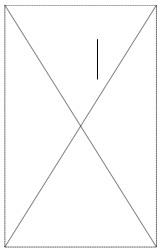
I

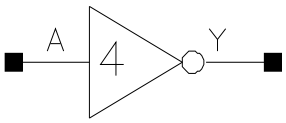
A
4
Y

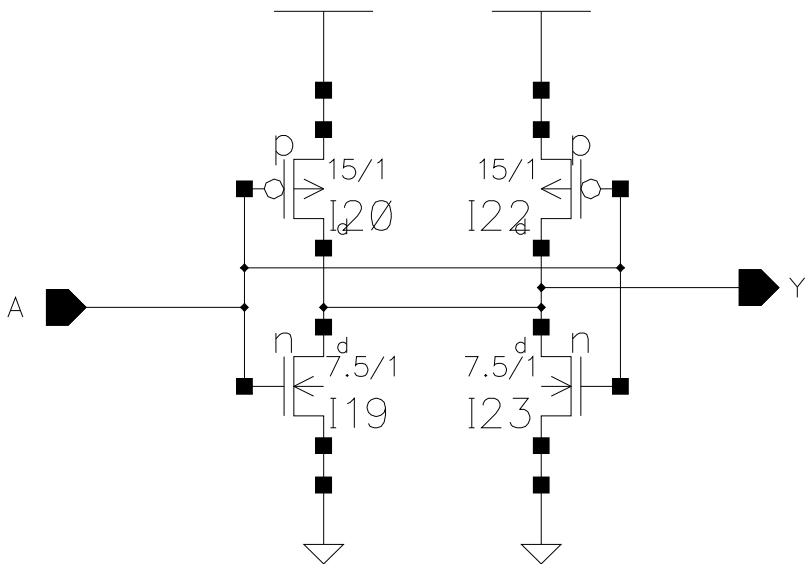
p
15/1
I20
15/1
p
I22
A
Y
n
d
7.5/1
I19
7.5/1
d
n
I23

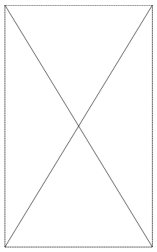

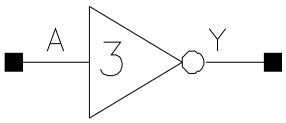
A
3
Y

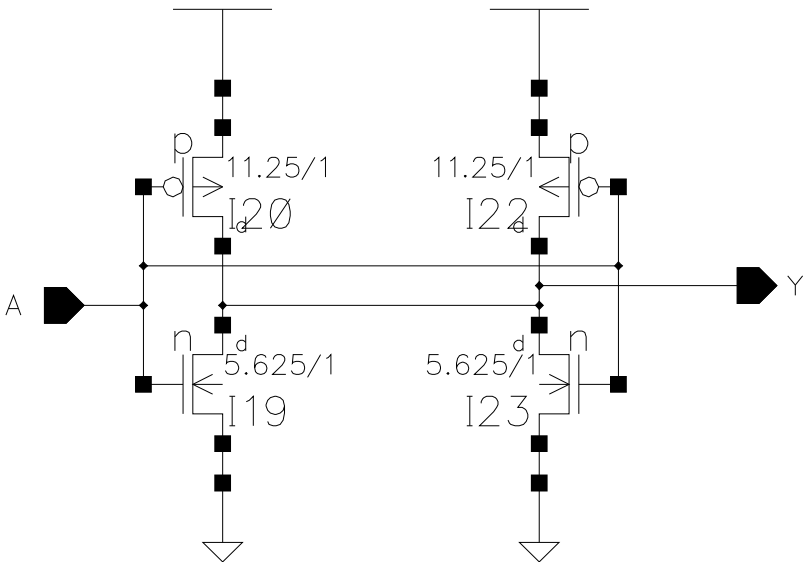
p
11.25/1
I20
11.25/1
p
I22
A
Y
n
d
5.625/1
I19
5.625/1
d
n
I23

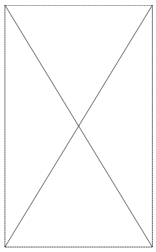

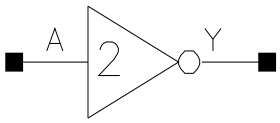
A
2
Y

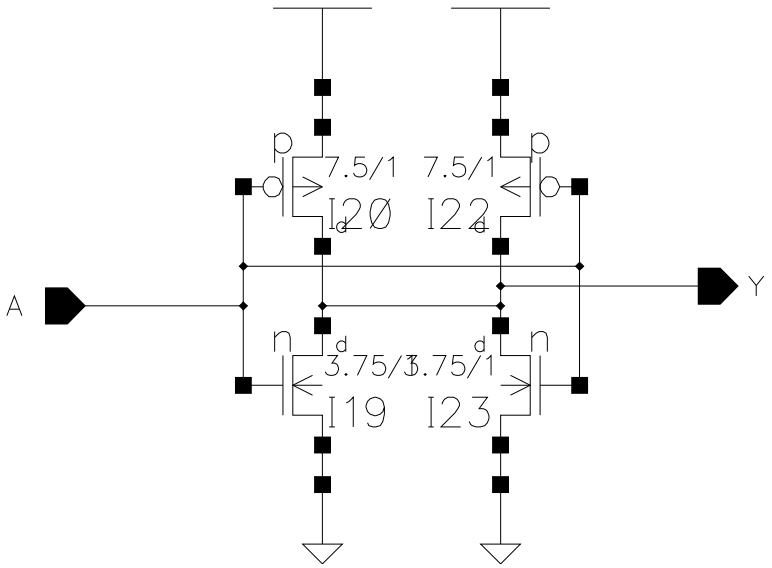
p
7.5/1
I20
7.5/1
I22
p
A
Y
n
3.75/1
I19
3.75/1
I23
n

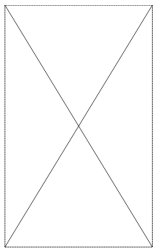

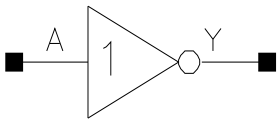
A
1
Y

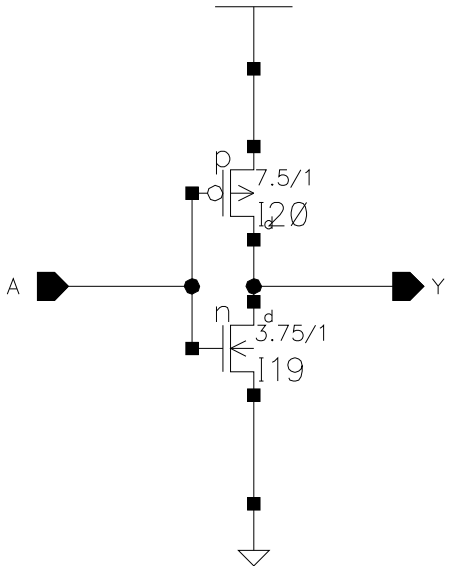
p
d
7.5/1
I20
A
Y
n
d
3.75/1
I19

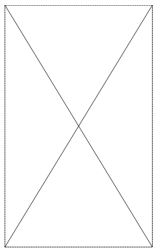

Amulet Group Low Power Cell Library Datasheets

The work here has been carried out as part of ESPIRIT project OMI-EXACT (the Open Microprocessor systems Initiative - Exploitation of Asynchronous Circuit Technologies)

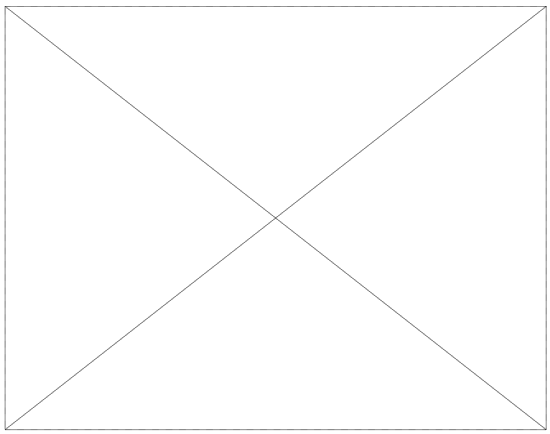

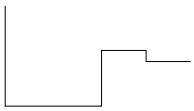

Craig Farnsworth (cf@cs.man.ac.uk)
Department of Computer Science
1995